peerless-AV®

Positioning Pixels Globally ™

SEAMLESS Connect
Universal dvLED Mounting System
LEDUNVM Series

***Actual configuration may vary**

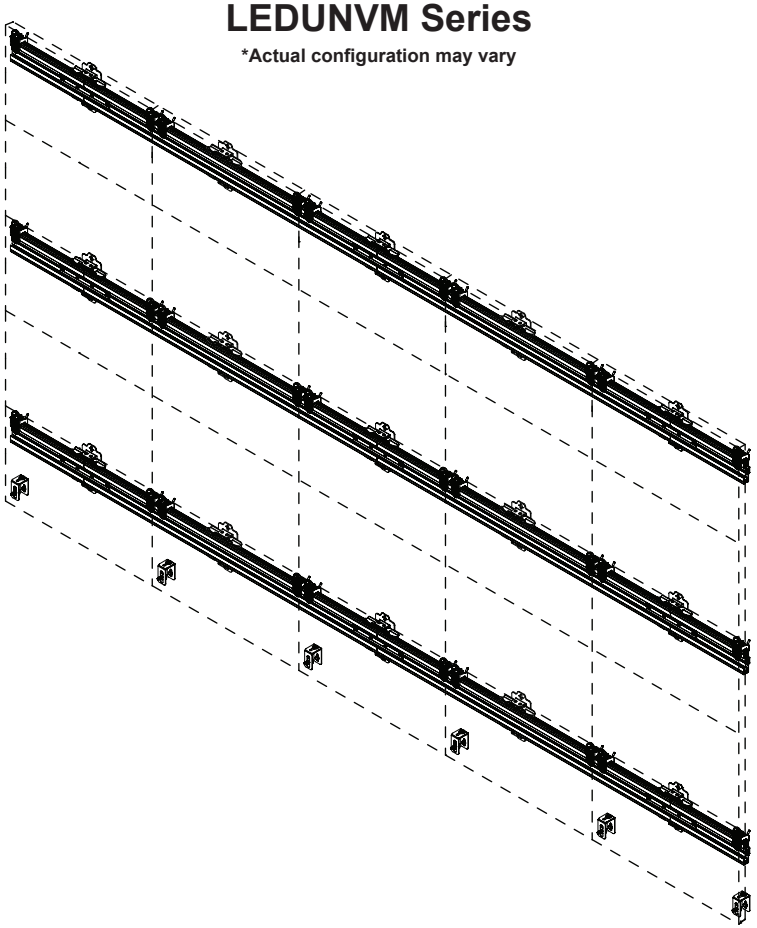

Scan to obtain dvLED Configurator Drawing:

ENG USA

EMEA

LEDUNVS installation video for reference only. Different steps will be taken for LEDUNVM and LEDUNVL. Read and follow the instruction manual for full installation.

⚠ WARNING

This product is designed to be installed on plywood walls. Hardware is included for plywood installation. This product is designed to be installed on flat, unobstructed, vertical walls. Do not install on curved or angled walls. Before installing make sure the supporting surface will support the combined load of the equipment and hardware. Screws must be tightly secured. Do not overtighten screws or damage can occur and product may fail. Never exceed the Maximum Load Capacity. Always use an assistant or mechanical lifting equipment to safely lift and position equipment. This product is intended for indoor use only. Use of this product outdoors could lead to product failure or personal injury. Be careful not to pinch fingers when operating the mount. For support please call customer care at 1-800-865-2112 or visit www.peerless-av.com.

Symbols

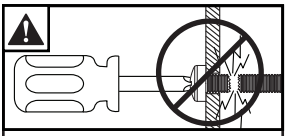

Do not overtighten screws.





Screws must get at least three full turns and fit snug.



Wear anti-static gloves.

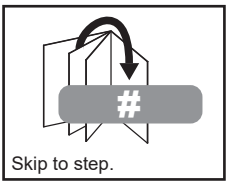

Skip to step.

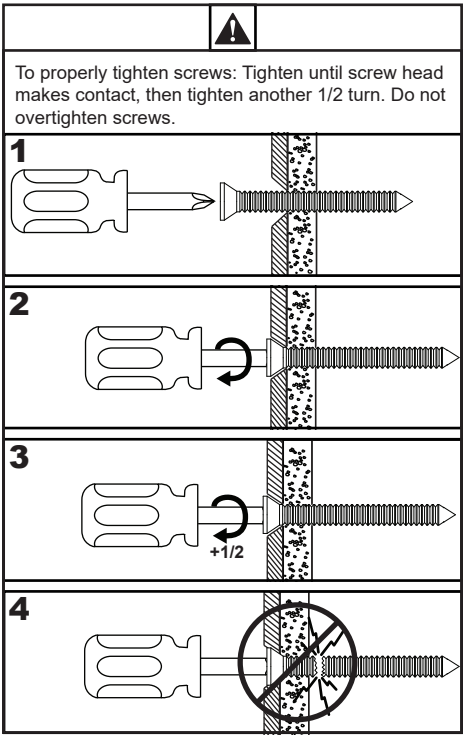

Tools Needed for Assembly.

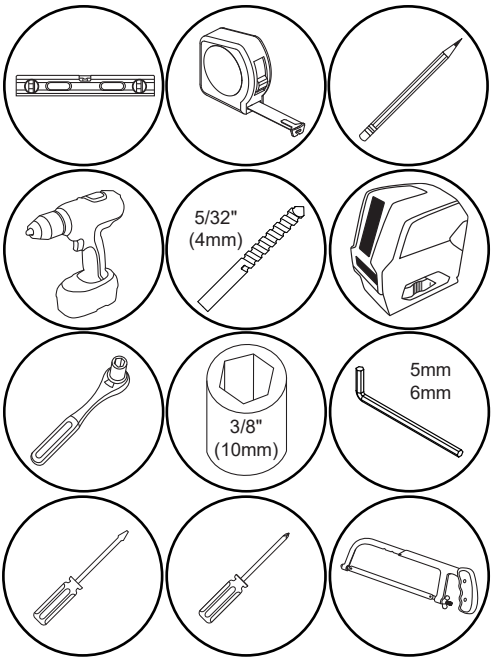

Parts (Before beginning, make sure you have all parts shown below). *Refer to parts list included with your model.

Parts List

	Description	Qty.*
A	latch assembly	
B	horizontal extrusion 960mm	
C	wall plate	
D	depth adjustment bracket	
E	end cap	
F	-	
G	#14 x 1.75" wood screw and 1/4" SAE washer	
H	M5/M6 cup washer	
I	M5 flat head screw	
J	M8/M10 cup washer	
K	M6 flat head screw	
L	M8 flat head screw	
M	M10 flat head screw	
N	M6 boss washer	
O	M8 boss washer	
P	M10 boss washer	

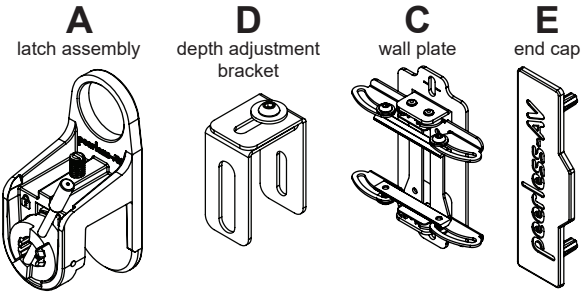

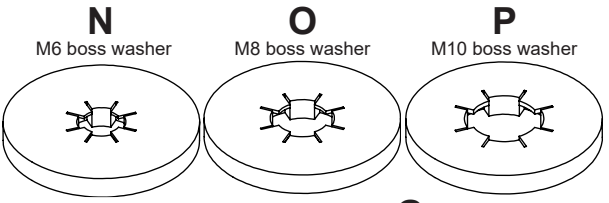

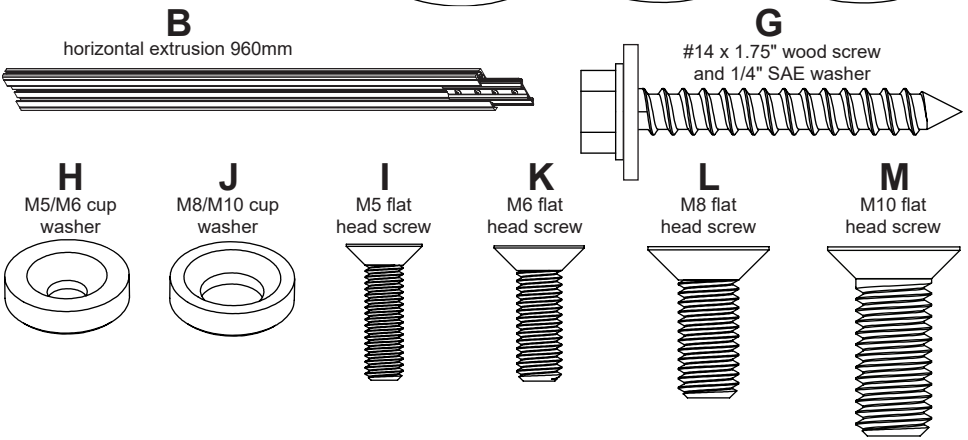

Parts List

	Description	Qty.
AA	spacer	2
BB	3mm allen wrench	1
CC	laser target	2
DD	4mm allen wrench	1
EE	spacer extension	2
FF	shim plate	2
GG	M4 flat head screw	12

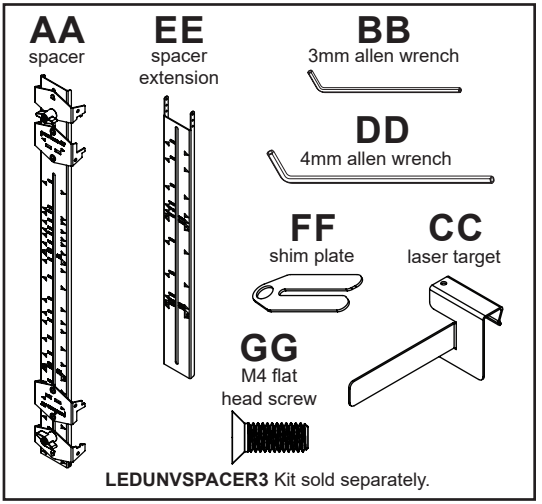

LEDUNVSPACER3 Kit sold separately.

1-1

For displays narrower than 960mm, determine the required extrusion length with the following extrusion cut to length formula:

Video Wall Width - 0.25" (6mm) = Extrusion Length

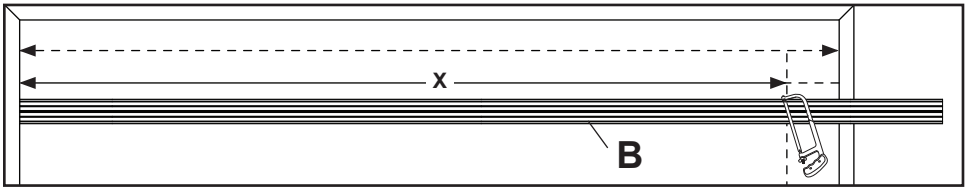

1-2

Connect two horizontal extrusions using connector plate.

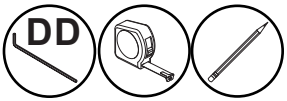

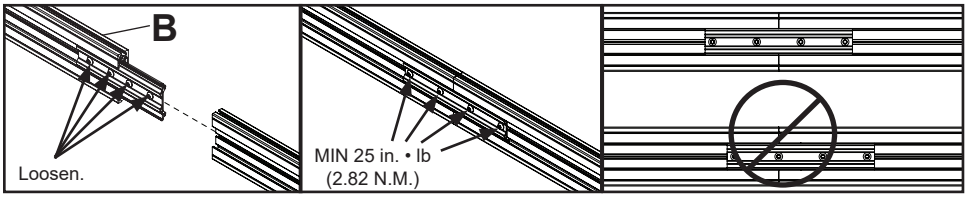

Front View

1-3

Slide wall plates onto extrusions and tighten with the wall plate fully extended. Refer to step 2 (sequence) for wall plate spacing.

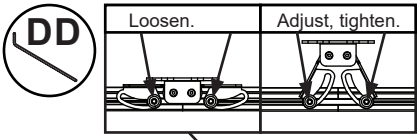

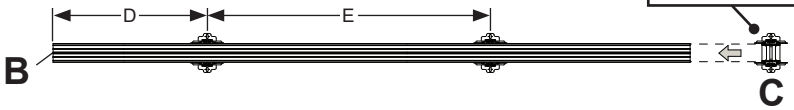

2-1

Determine the number of horizontal rows in your video wall. Use the corresponding dimensions from table on the next step based on video wall having either an odd or even number of rows. For displays taller than 610mm, the mount will always start at the bottom row and will not skip rows.

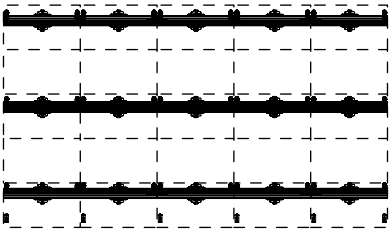

For odd number of rows, use dimension "A".

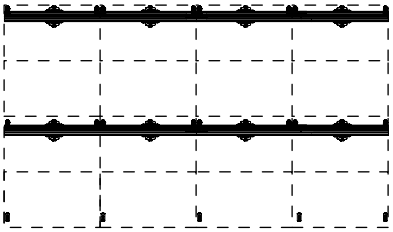

For even number of rows, use dimension "B".

2-2

See compatible display table and drawing below for dimensions that will locate mount on the wall.

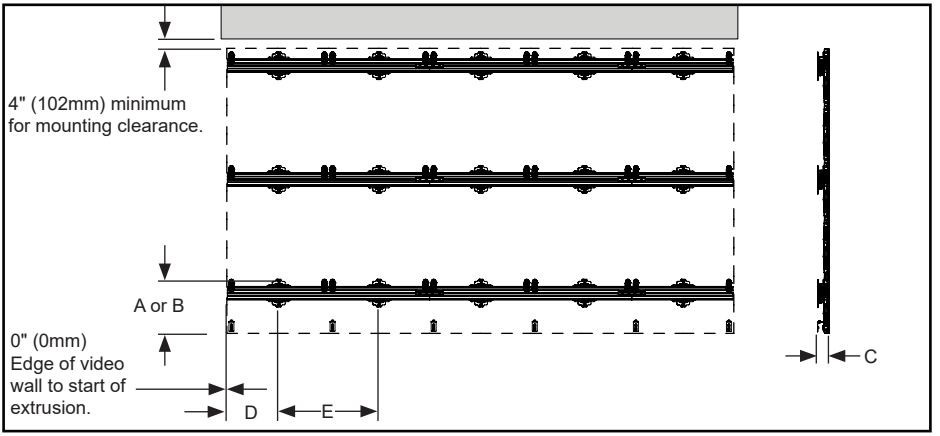

"D" = 1/2 of Display Width, Side of video wall to the center of first wall plate.
"E" = Display Width, Spacing of wall plates.

2-3

If display model is not listed on table in previous step, use formula provided to calculate the dimension ("A" or "B") used to locate mount on the wall. Y = bottom of display tile to top pair of mounting holes on back of display.

A = Y + 0.03" (0.75mm)

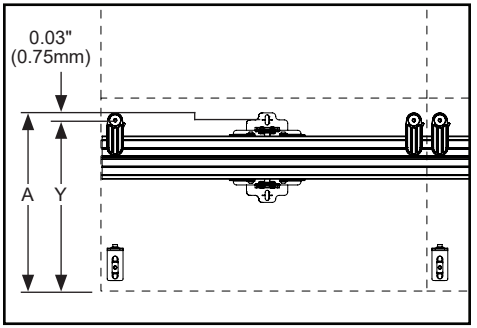

For odd number of rows, start with extrusion at bottom row.

B = Y + 0.03" (0.75mm)

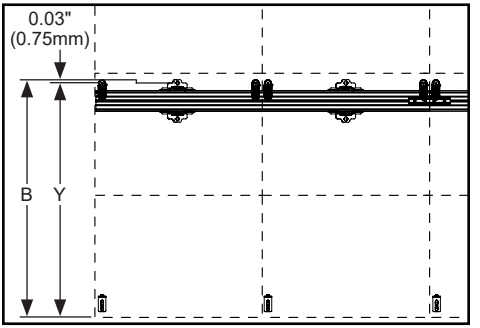

For even number of rows, start with extrusion at second row of displays from the bottom.

Compatible Display	Bottom of video wall to notch of first wall plate (Odd number of rows) Dimension A	Bottom of video wall to notch of first wall plate (Even number of rows) Dimension B	System Depth Range Dimension C
Absen CPL & KL II	13.2" (335mm)	27.4" (695mm)	4.3" - 5.8" (108-148mm)
Absen KL	17.8" (453mm)	36.7" (933mm)	3.9" - 5.5" (100-140mm)
Absen K v3 (750x250)	8.7" (220mm)	18.5" (470mm)	3.1" - 4.7" (79-119mm)
Absen N Plus (864x288)	9.9" (251mm)	21.2 (539mm)	3.7" - 5.3" (94-134mm)
Absen NX 960x540	20.6" (522mm)	41.8" (1062mm)	3.4" - 5" (67-127mm)
Absen XL	17.9" (455mm)	36.8" (935mm)	4.1" - 5.6" (103-143mm)
Dahua SC	18.3" (465mm)	37.2" (945mm)	3.3" - 4.9" (85-125mm)
Dahua SE (750x250)	8.7" (220mm)	18.5" (470mm)	2.8" - 4.4" (71-111mm)
Dahua SE (750x500)	18.5" (470mm)	38.2" (970mm)	2.8" - 4.4" (71-111mm)
Daktronics AFN (900x506)	18.4" (466mm)	38.3" (973mm)	4.2" - 5.8" (107-147mm)
HIKVISION CGFB	9.2" (233mm)	19" (483mm)	3.5" - 5.1" (90-130mm)
HIKVISION DS-D4018CS-1F	18.3" (465mm)	37.2" (945mm)	3.9" - 5.5" (100-140mm)
LED studio 43 EDGE PRO	20.5" (520mm)	41.7" (1060mm)	3.1" - 4.7" (79-119mm)
LEDEC CV	17.7" (450mm)	36.6" (930mm)	4.0" - 5.6" (102-143mm)
Leyard GF	17.5" (444mm)	36.4" (924mm)	4.5" - 6.1" (114-154mm)
Linsin MA (640x480)	17.5" (444mm)	36.4" (924mm)	3.8" - 5.4" (96-136mm)
Planar Luminate Ultra W	13.6" (346mm)	27.8" (706mm)	4.4" - 6.0" (113-153mm)
Samsung IBF-T	17.9" (455mm)	37.6" (955mm)	3.2" - 4.8" (82-122mm)
Thor Canvas	16.6" (498mm)	40.9" (1040mm)	3.2" - 4.8" (82-122mm)
Unilumin FCQ	13.4" (340mm)	27.6" (700mm)	3" - 4.6" (77-117mm)
Unilumin UTWIII	20.5" (520mm)	41.7" (1060mm)	2.8" - 4.4" (71-111mm)
Uniview UHD (960x540)	19.7" (500mm)	40.9" (1040mm)	3.2" - 4.8" (82-122mm)
Vanguard LA 43"	20.5" (520mm)	41.7" (1060mm)	3.1" - 4.7" (79-119mm)
Vanguard ZIRCONIUM 750x250	9.3" (235mm)	19.1" (485mm)	3.3" - 4.9" (85-125mm)
Vantage VI 768x288	10.7" (272mm)	22.0" (560mm)	3.3" - 4.9" (85-125mm)

ENG This page intentionally left blank.

⚠ WARNING

When installing Peerless wall mounts on a wood stud wall covered with plywood, verify that the wood studs are a minimum of 2" x 4" nominal size and plywood is a minimum Grade BC, 1/2" (13mm) thick. Plywood may be covered by gypsum board (drywall) up to 5/8" thick.

3

Install the bottom extrusion assembly, on the laser line per table (step 2), dimension "A" or "B". Install additional bottom row extrusions one at a time using connector plates to join extrusions (step 1). Drill mounting holes and install screws and washers with notch of wall plates on the laser line.

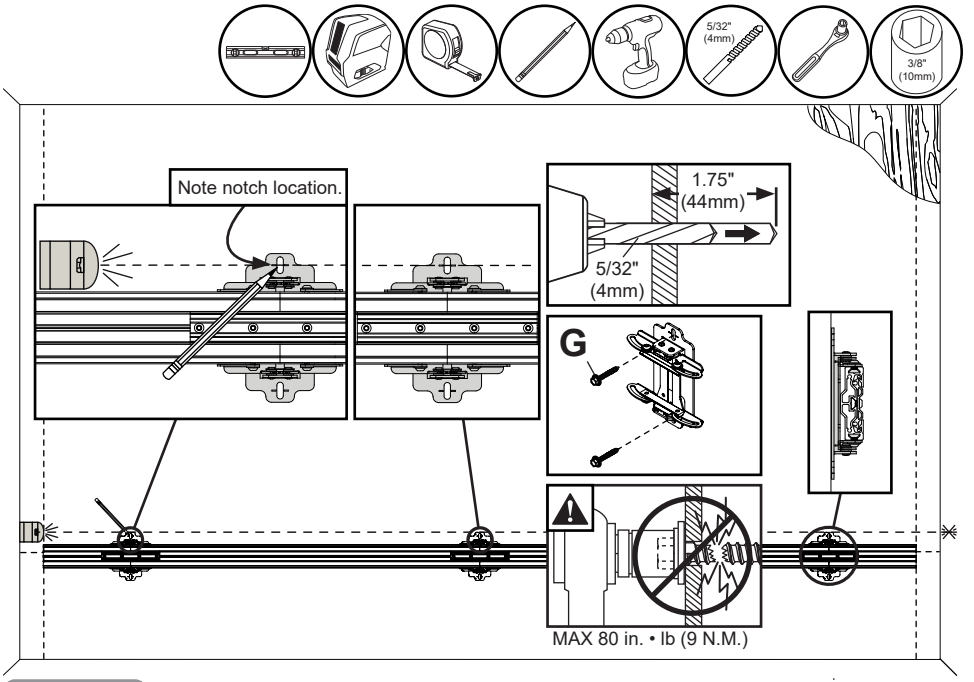

3-1

Determine the combined height of TWO displays being mounted and locate the same dimension on the front of the spacer. If that height is above 686mm, attach spacer extension. If that height is not listed on the spacer, use measurement of the combined height of TWO displays to set custom spacing.



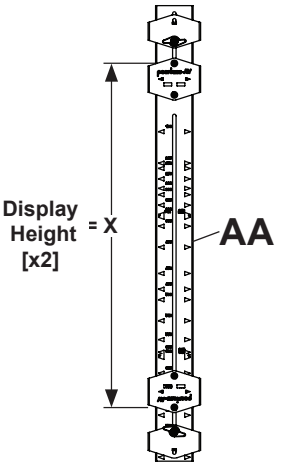

X > 686mm → 3-2

X ≤ 686mm → 4a

X = Not listed → 4b-1

3-2

Add the extension when "X" measurement (step 3) is taller than 686mm. Detach lower fixed jaw and clamp bracket from main spacer assembly and reattach to the extension.

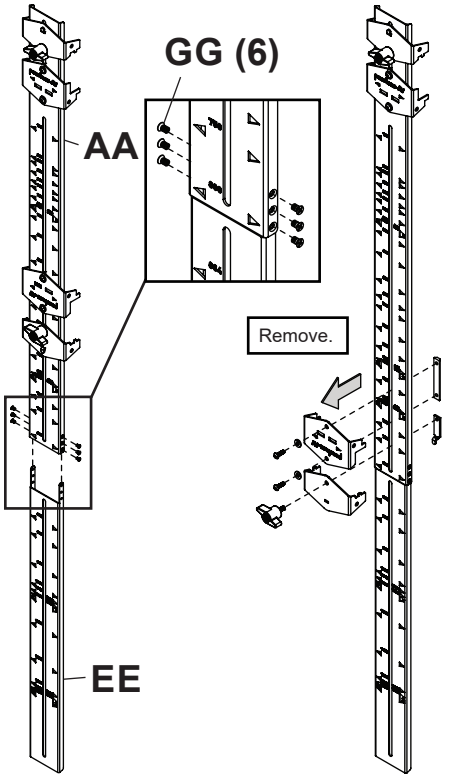

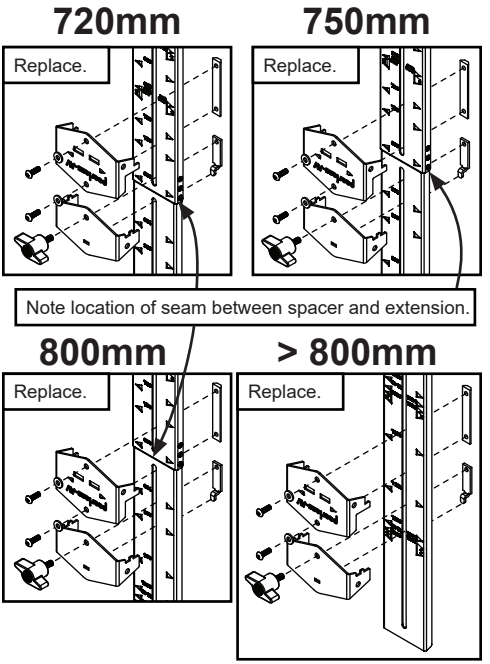

4a

Move spacer bracket and clamp to align window of spacer bracket with corresponding height value (measurement "X", step 3).

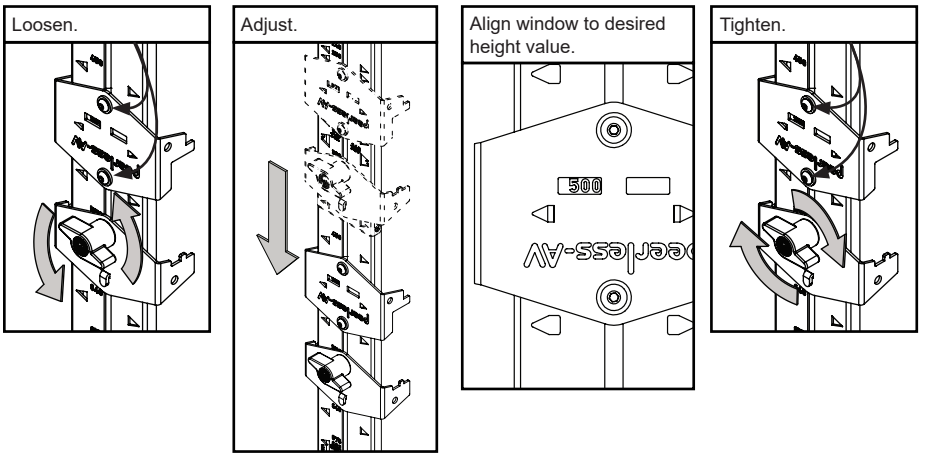

4b-1

If the combined height of TWO displays is not listed on the spacer, measure them to set custom spacing. Remove top spacer clamp. Move upper spacer bracket to the zero position. Loosen lower spacer bracket to insert shim plate underneath to allow spacer bracket to slide freely.

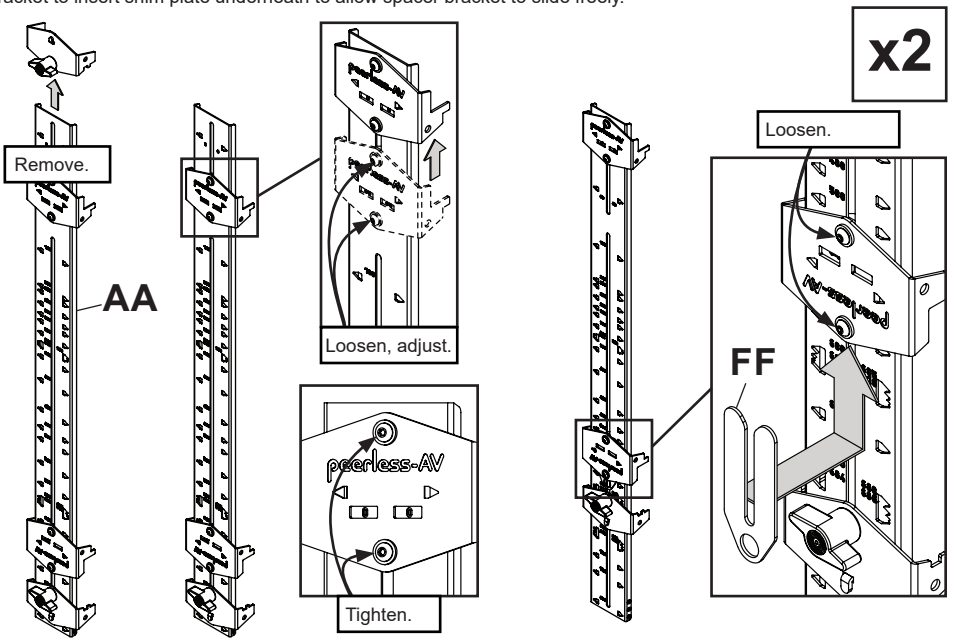

4b-2

With spacer brackets positioned wide enough to fit TWO displays inside, position notch of top spacer bracket flush with top edge of display. Slide the bottom spacer bracket to the bottom edge of display. Tighten screws of bottom spacer bracket.

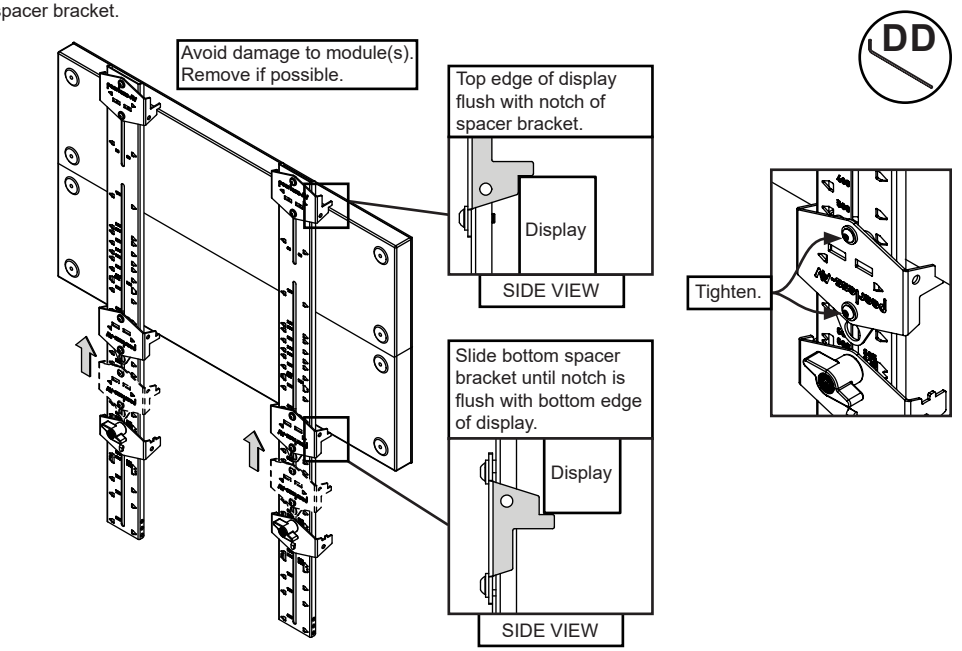

4b-3

Remove display. Return top spacer bracket to the 80mm position. Replace top clamp onto assembly.

DD

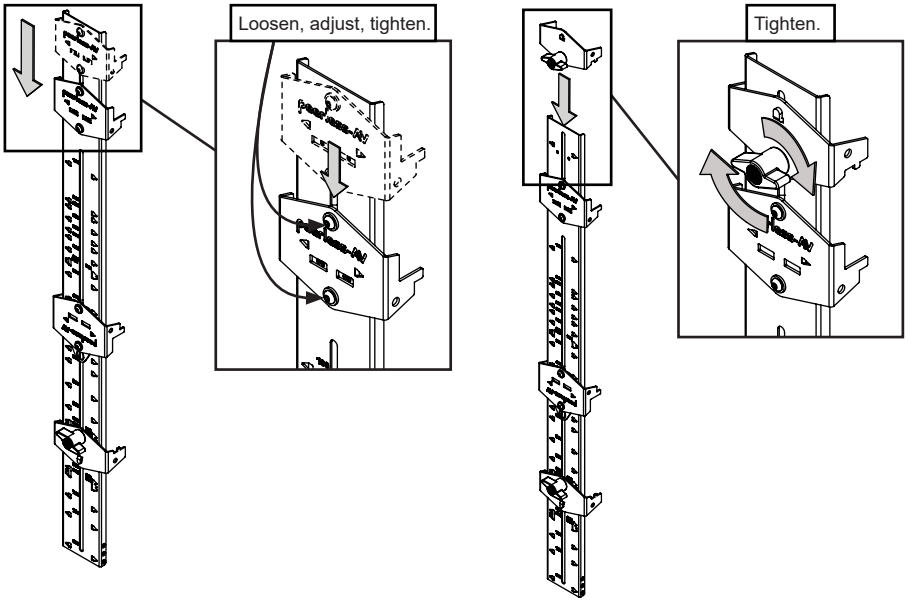

5

Install remaining extrusions using the spacers. Clamp the upper spacer jaw assembly to an uninstalled extrusion assembly. Clamp the bottom spacer jaw assembly to the installed extrusion. Vertically align extrusions with a laser. Drill mounting holes into supporting surface and install wall plates to the wall.

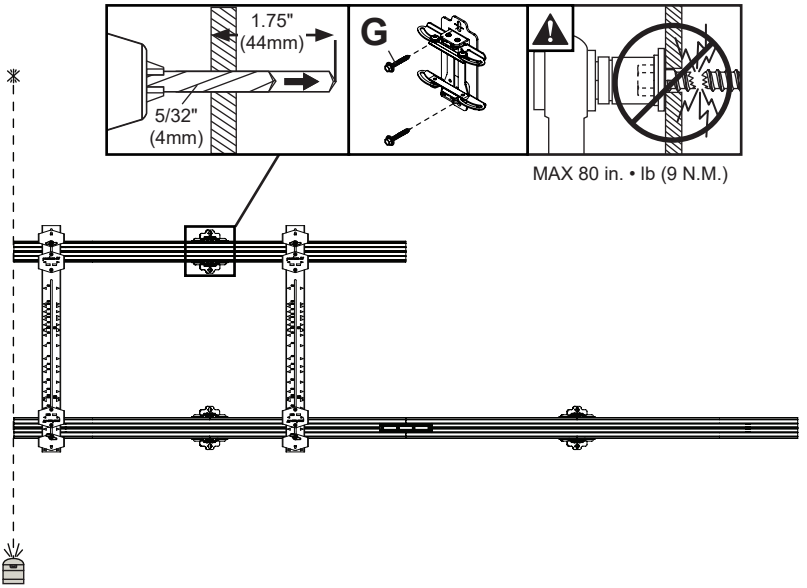



6

Loosen clamps and remove spacers. Repeat previous steps to install the next extrusion. Engage and secure connecter plate to mounted extrusions. Secure wall plates to wall. Remove spacer when extrusions are fully secured.

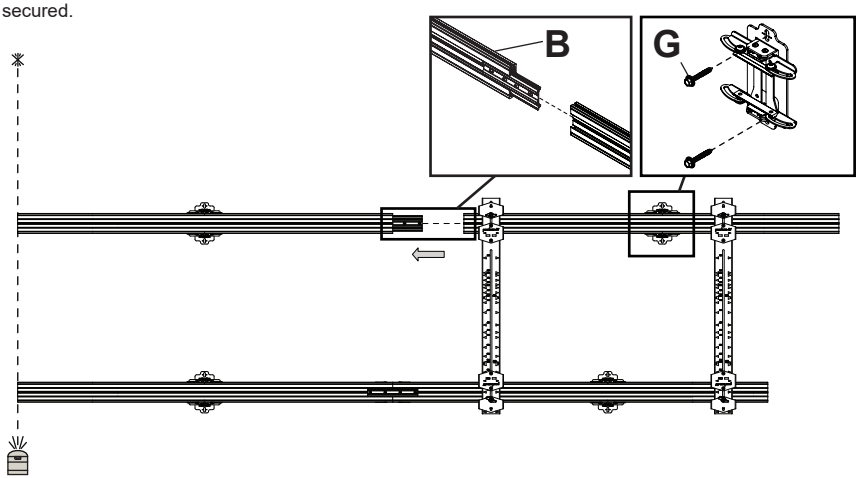

7-1

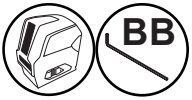

Set the laser level so that it is parallel to the mounting surface (wall). Measure from wall to laser in various locations and find the wall's high point. Mount the laser target near the wall's high point and closest wall plate. Adjust the extrusion out slightly from the wall, tighten wall plate screws and mark laser line on the target. Move the target to the remaining wall plates, adjusting depth until the laser is on the line, tightening the screws as you go.

Double check using a straight edge to span three extrusions. Adjust low and high spots as needed.

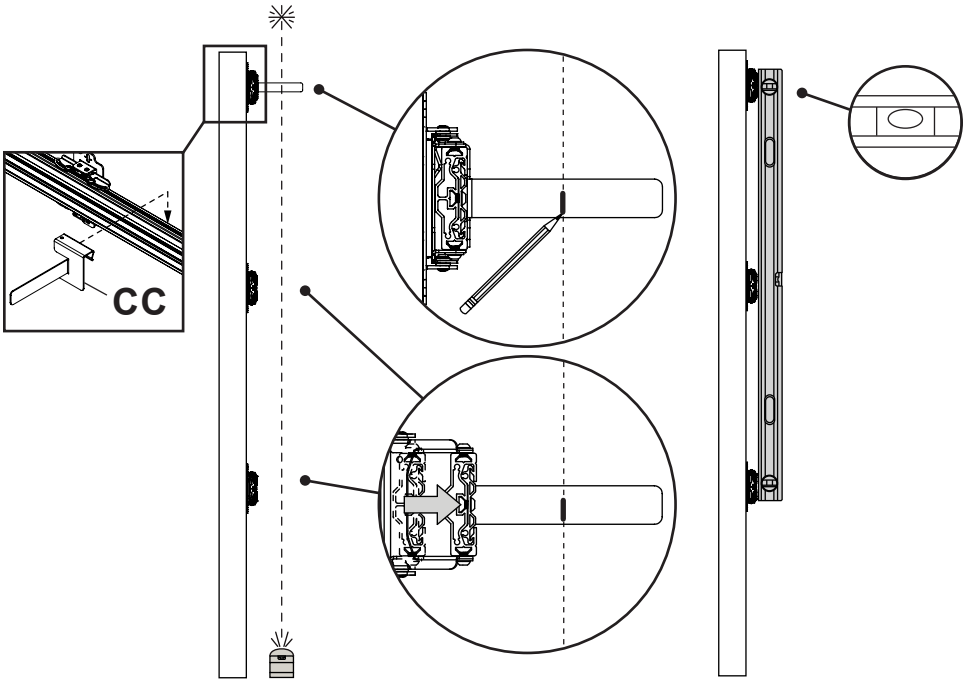

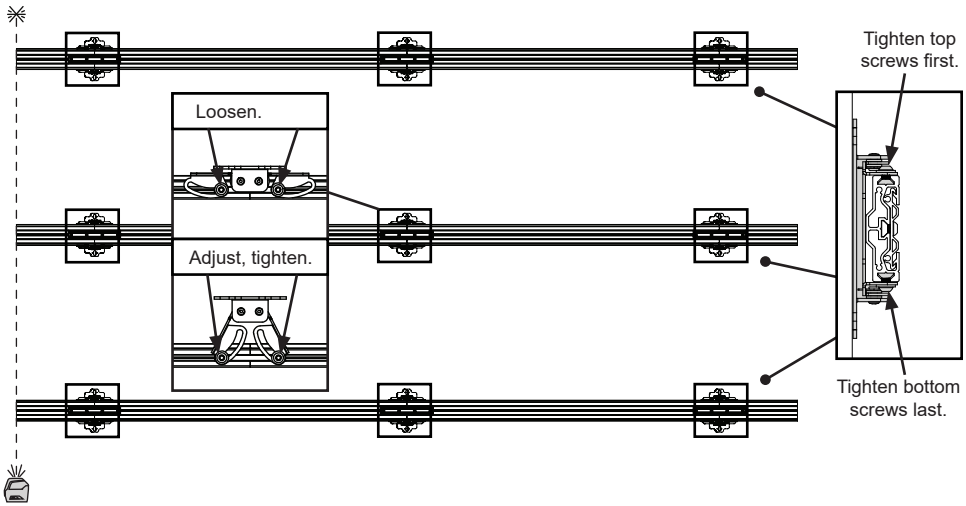

7-2

Attach end caps.

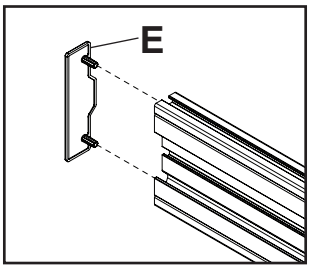

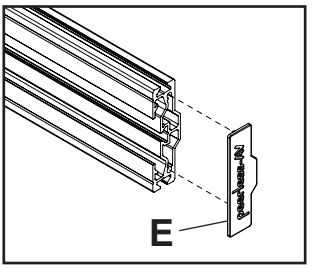

8

If you're also installing the SEAMLESS Connect Universal dvLED Trim Kit LEDTK Series (sold separately), please reference the trim kit instruction manual now to simplify the installation process.

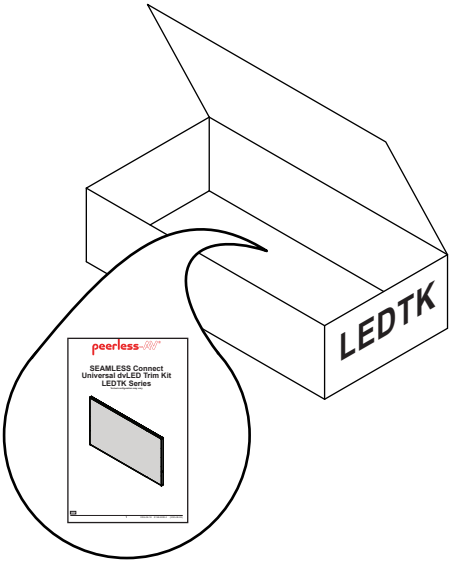

ENG This page intentionally left blank.

9a

ODD
Number of Rows

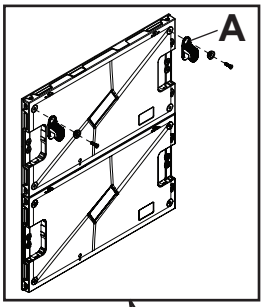

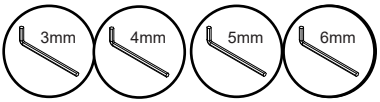

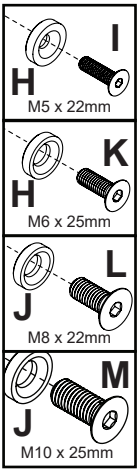



If mounting hardware is preinstalled, remove and replace with hardware provided.

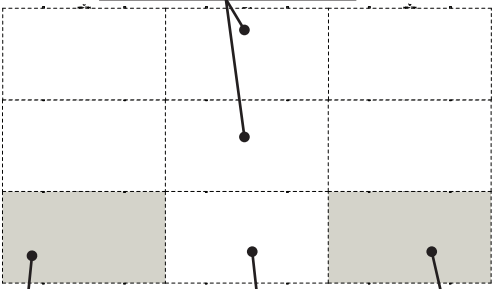

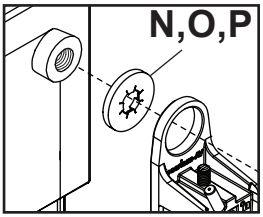

If display has raised mounting points, use boss washers as shown.

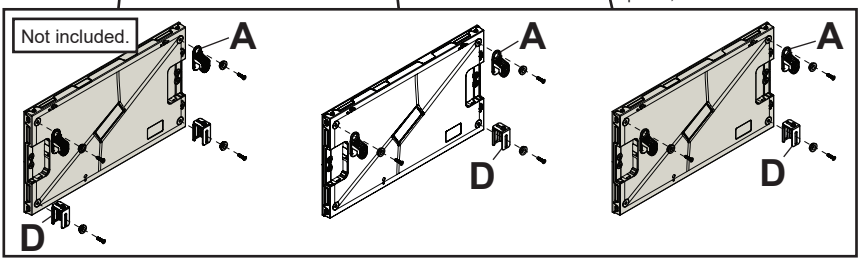

9b

EVEN
Number of Rows

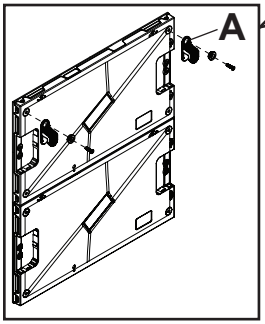

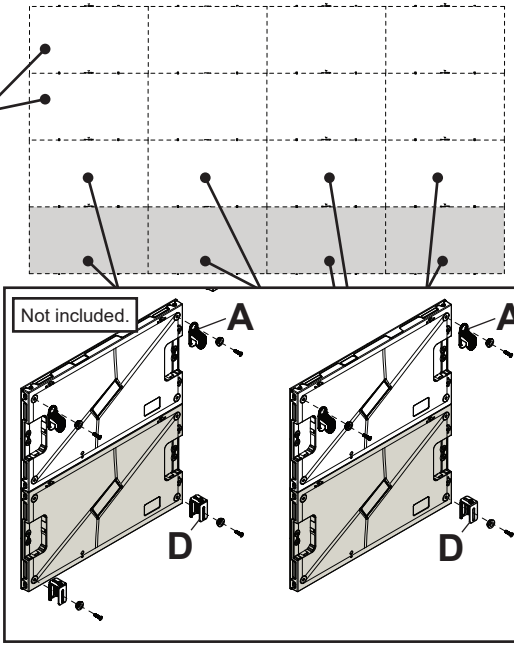

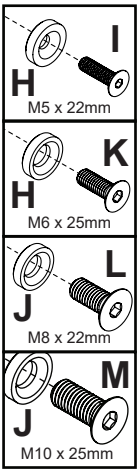

Join two cabinets together vertically using connecting system. Two displays attached together are then mounted onto extrusion as one.

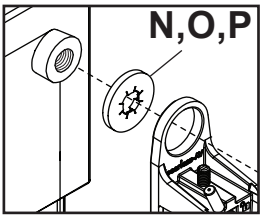

If display has raised mounting points, use boss washers as shown.

10-1

Hook display cabinets onto horizontal extrusion, adjust height to level and join cabinets together using display's connecting system. Adjust plumb with depth adjustment bracket, close latch, then run cables one at a time starting from left to right.

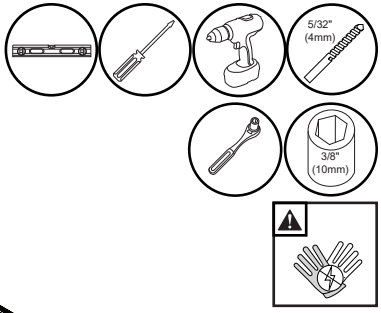

OPTIONAL: Depth adjustment bracket can be disassembled and 'L' bracket rotated as shown to achieve additional depth.

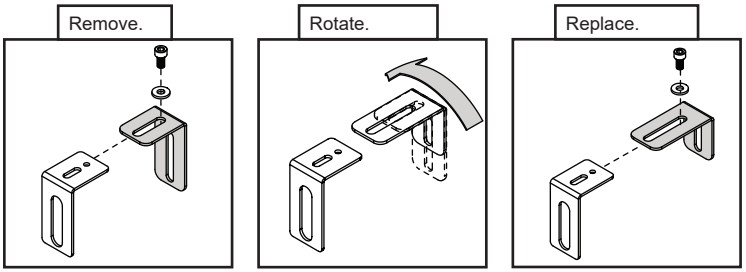

10-2

Hook display cabinets onto horizontal extrusion, adjust height to level and join cabinets together using connecting system. Close latch, then run cables one at a time starting from left to right.

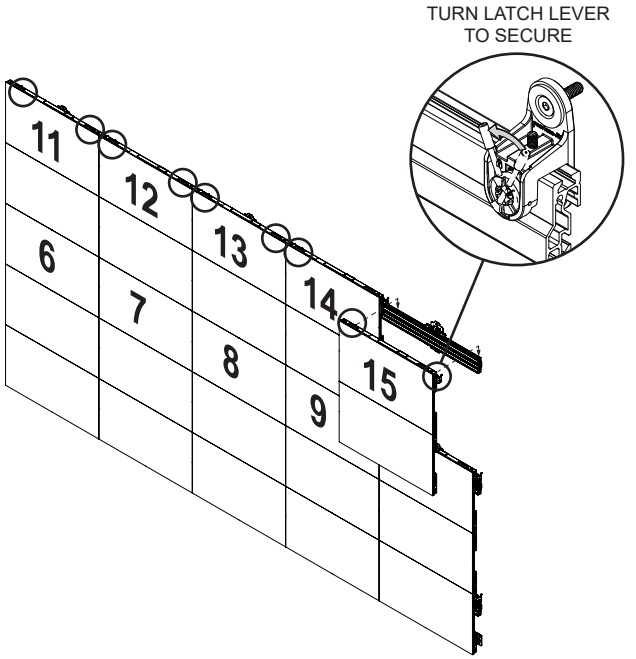

10-3

To remove, start from the top right. Open latch assemblies, disconnect cables, separate cabinets and remove displays one set at a time.

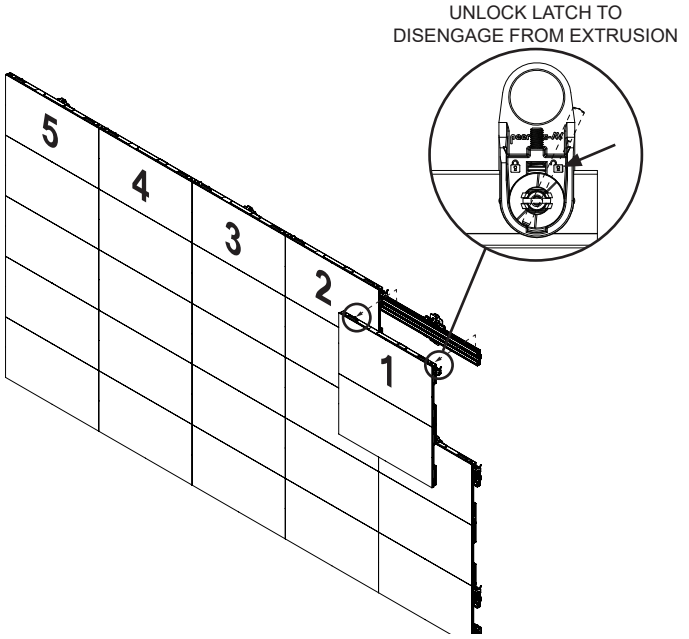

ENG	Warranty	ESP	Garantía	FRN	Garantie	DEU	Garantie	NEL	Garantie
ITL	Garanzia	ČEŠ	Záruka	SLK	Záruka	POR	Garantia	TÜR	Garanti

www.peerless-av.com/warranty • www.peerless-av.com • www.peerless-av.com/patents

Peerless-AV
2300 White Oak Circle
Aurora, IL 60502, USA
info@peerless-av.com

(800) 865-2112
(630) 375-5100

Peerless-AV EMEA
Unit 2, Curo Park
Frogmore, St. Albans,
Hertfordshire, AL2 2DD
United Kingdom

+44 (0) 1923 200 100

Peerless-AV B.V.
Papendorpseweg 75
3528 BJ Utrecht
The Netherlands

+31 (0) 70 770 8037

Peerless-AV Latin America
Av. de las Industrias 413
Parque Industrial Escobedo
General Escobedo N.L.,
México 66062

+52 (81) 8384-8300

© 2026 Peerless Industries, Inc. Peerless-AV® is a registered trademark of Peerless Industries, Inc. All rights reserved.
Other parties' marks are the property of their respective owners.