peerless-AV®

Positioning Pixels Globally ™

SEAMLESS Connect
Universal dvLED Floor-to-Ceiling
LEDFCS Series

See configuration drawing	See configuration drawing

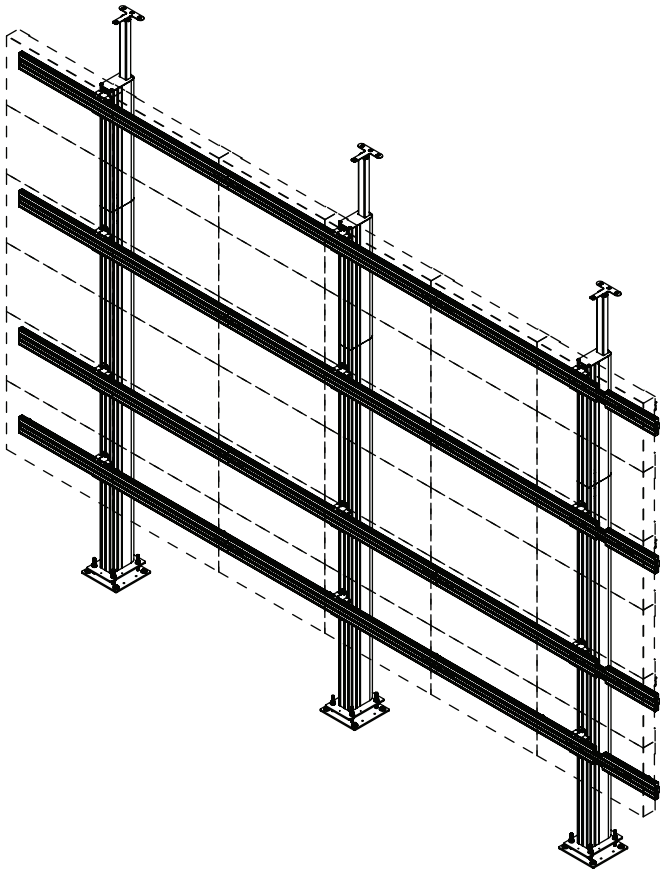

ENG

⚠ WARNING

ENG - This product is designed to be installed on solid concrete. Hardware is included for solid concrete installation. Before installing make sure the supporting surface will support the combined load of the equipment and hardware. Screws must be tightly secured. Do not overtighten screws or damage can occur and product may fail. Never exceed the Maximum Load Capacity. Always use an assistant or mechanical lifting equipment to safely lift and position equipment. This product is intended for indoor use only. Use of this product outdoors could lead to product failure or personal injury. Be careful not to pinch fingers when operating the mount. For support please call customer care at 1-800-865-2112.

ENG Symbols



ENG **WARNING**



ENG Screws must get at least three full turns and fit snug.

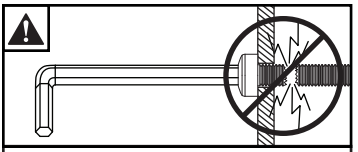

ENG Do not overtighten screws.

ENG To properly tighten screws: Tighten until screw head makes contact, then tighten another 1/2 turn. Do not overtighten screws.

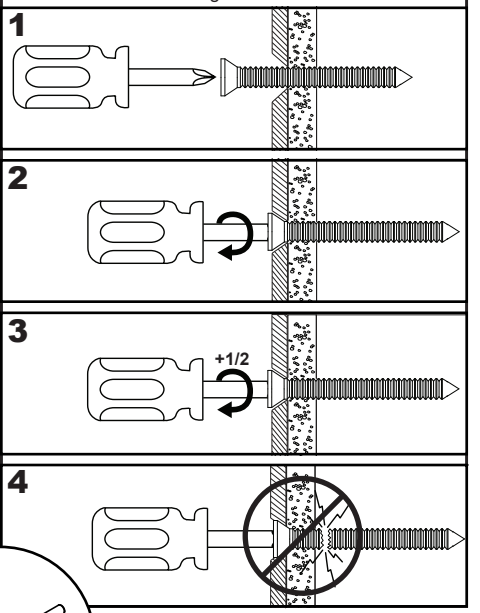

Tools Needed for Assembly.

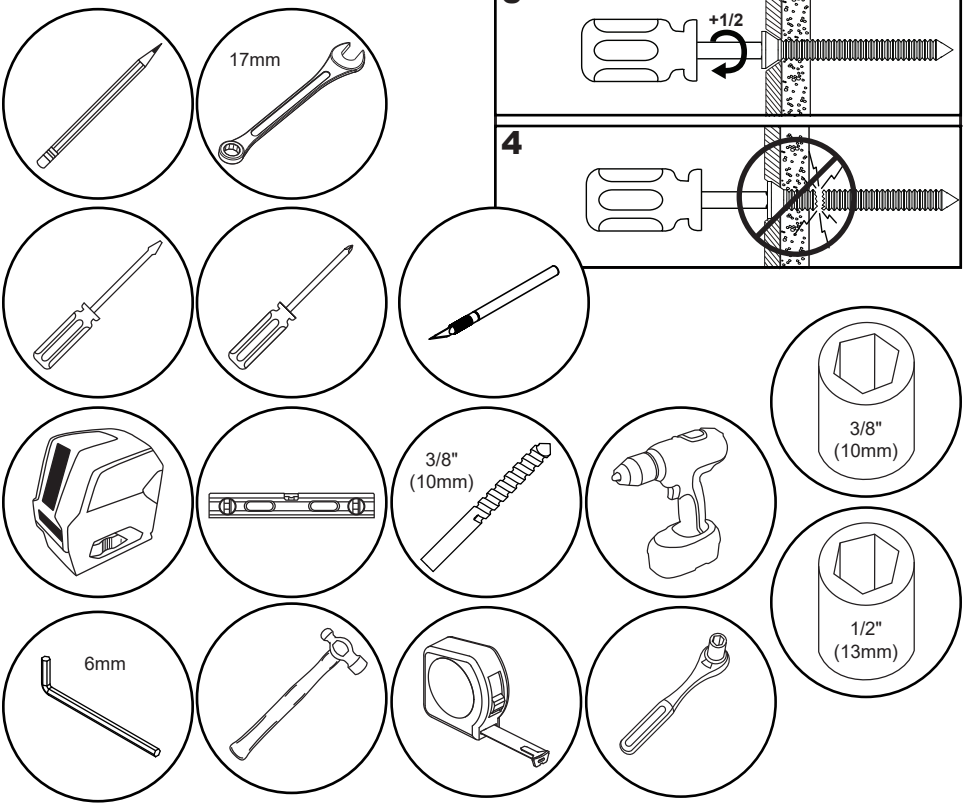

Parts (Before beginning, make sure you have all parts shown below). *Refer to parts list included with your model.

Parts List

	Description	Qty*
A	base mounting plate	*
B	floor plate	
C	hex nut	
D	attachment bracket	
E	M8 x 50mm socket screw	
F	1/4" washer	
G	upright, long	
H	upright, short	
I	latch assembly	
J	extrusion end cap	
K	horizontal extrusion 600mm	
L	-	
M	horizontal extrusion 1200mm	
N	nut bar, four screw	
O	barbed fastener	
P	upright cover	
Q	M10 washer	
R	large washer	
S	horizontal extrusion expandable	
T	drop-in nut bar	
U	anchor	
V	5mm allen wrench	
W	M5 cup washer	
X	M6/M8 cup washer	
Y	M5 flat head screw	
Z	M6 flat head screw	
AA	M8 flat head screw	
BB	M10 flat head screw	
CC	stand-off bracket	
DD	-	
EE	offset attachment bracket	
FF	-	
GG	M6 x 10mm socket screw	
HH	1" washer	
II	ceiling bracket	
JJ	#14 x 2-1/2" wood screw	
KK	8mm concrete anchor	
LL	top alignment plate	
MM	M6 boss washer	
NN	M8 boss washer	
OO	M10 boss washer	

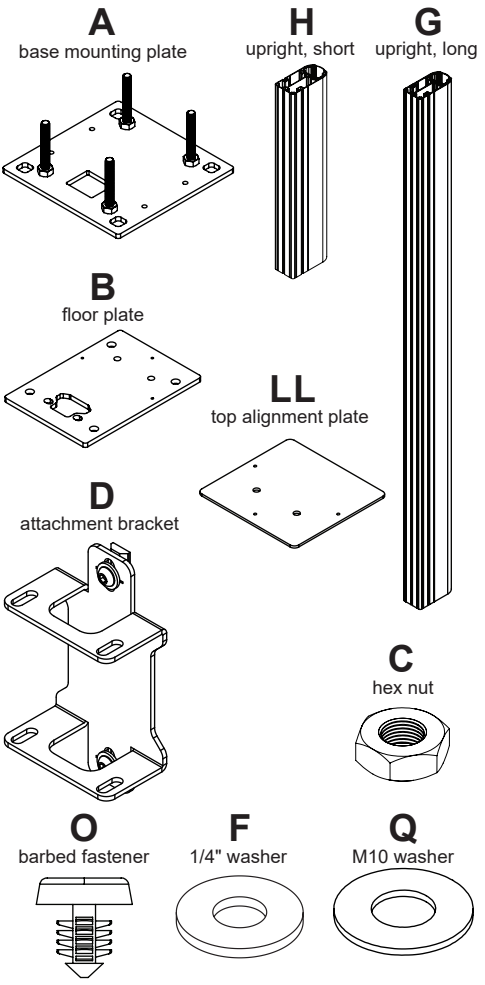

V
5mm allen wrench

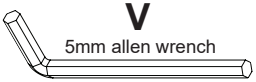

GG
M6 x 10mm

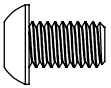

P
upright cover

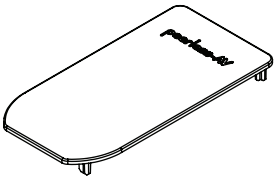

II
ceiling bracket

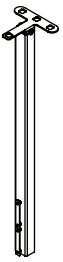

CC
stand-off bracket

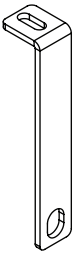

T
drop-in nut bar



U
anchor

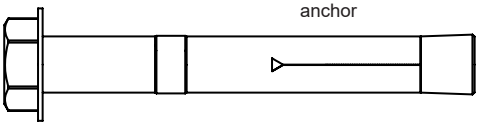

W
M5 cup washer

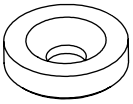

X
M6/M8 cup washer

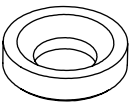

Y
M5 flat head screw

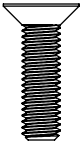

Z
M6 flat head screw



AA
M8 flat head screw

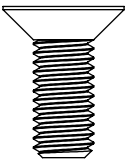

BB
M10 flat head screw

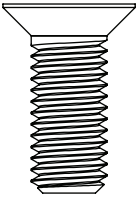

EE
offset attachment bracket

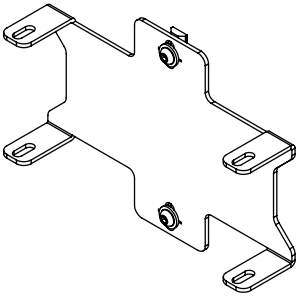

HH
1" washer

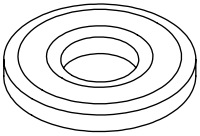

KK
8mm concrete anchor

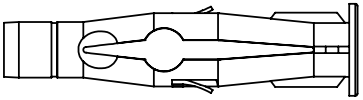

JJ
#14 x 2-1/2" wood screw

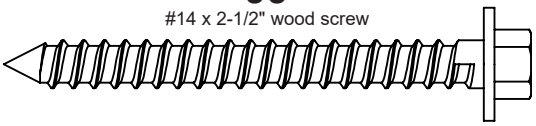

E
M8 x 50mm



MM
M6 boss washer

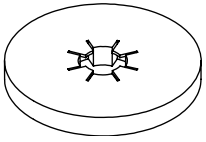

NN
M8 boss washer

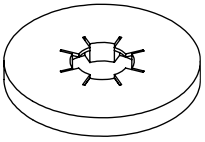

OO
M10 boss washer

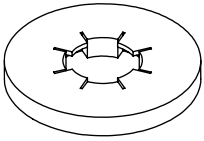

R
large washer

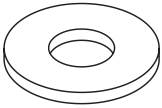

Parts List

	Description	Qty.
AAA	spacer	2
BBB	3mm allen wrench	1
CCC	laser target	2
DDD	4mm allen wrench	1
EEE	spacer extension	2
FFF	shim plate	2
GGG	M4 flat head screw	12

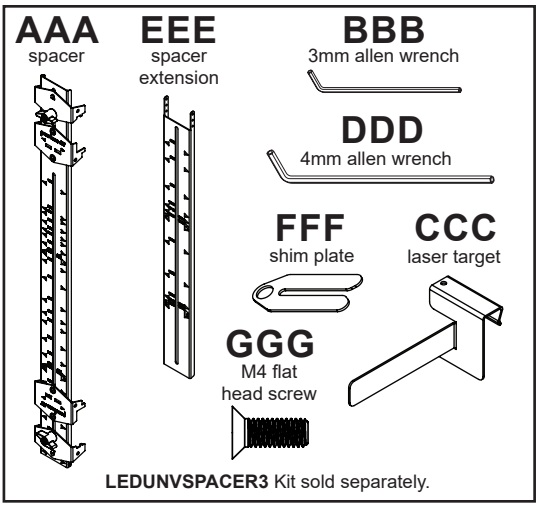

LEDUNVSPACER3 Kit sold separately.

1

Scan QR Code provided to obtain dvLED configurator drawing specific to your model.

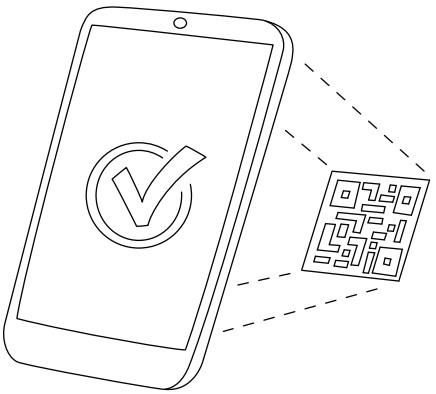

USA

UK

2

Join vertical uprights using nut bars provided. Arrange so that longest upright is at the bottom.



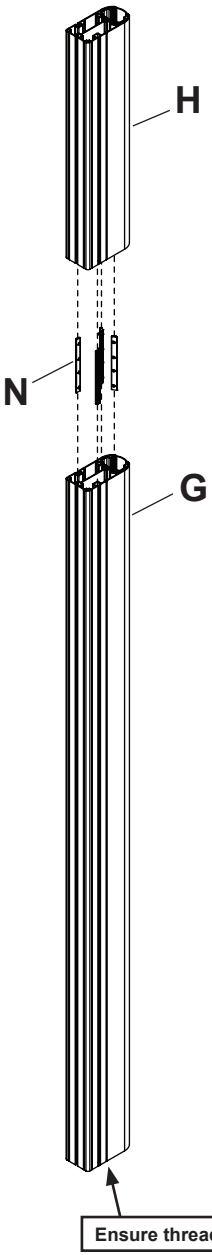

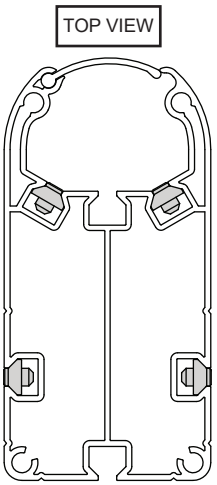

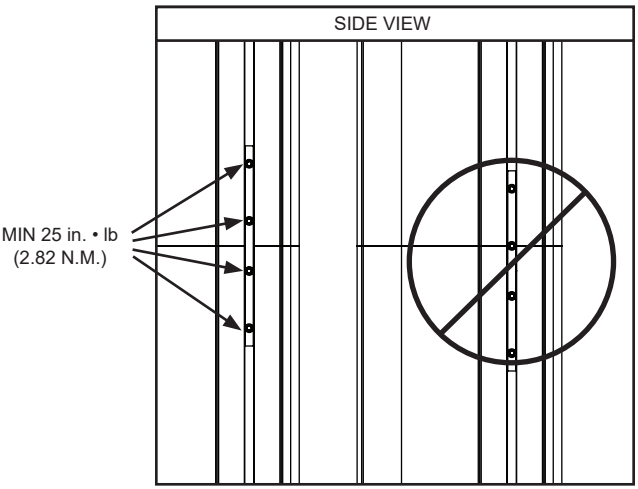

Ensure threaded holes are at bottom of the bottom upright.

3

Reference configuration drawing specific to your model for spacing of base mounting plates.

3 DISPLAY COLUMN VIDEO WALL

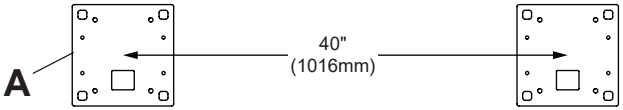

4 & 5 DISPLAY COLUMN VIDEO WALL

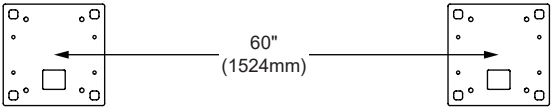

6 & 7 DISPLAY COLUMN VIDEO WALL

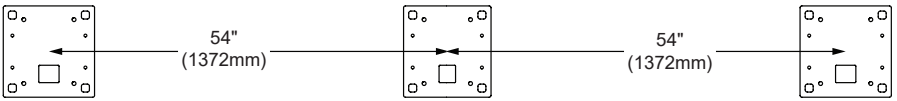

8 DISPLAY COLUMN VIDEO WALL

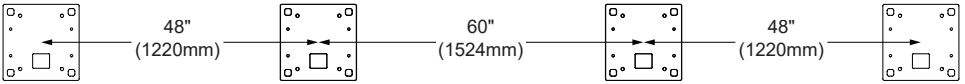

>8 DISPLAY COLUMN VIDEO WALL

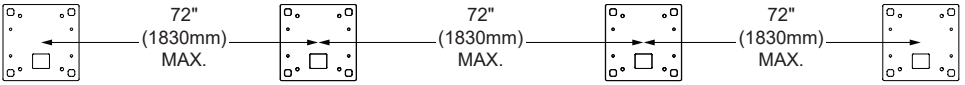

Position upright in center of each display column on the ends.
Spacing between two uprights going towards the video wall center shall not exceed 72" (1830mm).

For display widths that measure 600-610mm, follow the above layout illustrations for spacing of vertical uprights (base mounting plates).

For displays widths that measure less than 600mm, position one vertical upright (base mounting plate) at the center of the first and last display column. Place vertical uprights and skip every two display columns towards the center of the video wall. The middle of the video wall may have vertical uprights one or two display columns apart.

4

⚠ WARNING

ENG - When installing Peerless mounts on a concrete floor, the floor must be at least 8" thick with a minimum compressive strength of 2000 psi. Never attach concrete expansion anchors to concrete covered with plaster, drywall, or other finishing material.

4-1

Refer to configuration drawings specific to your model for spacing of base mounting plates. Mark mounting holes.

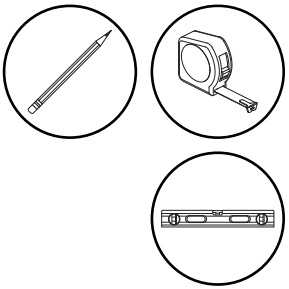

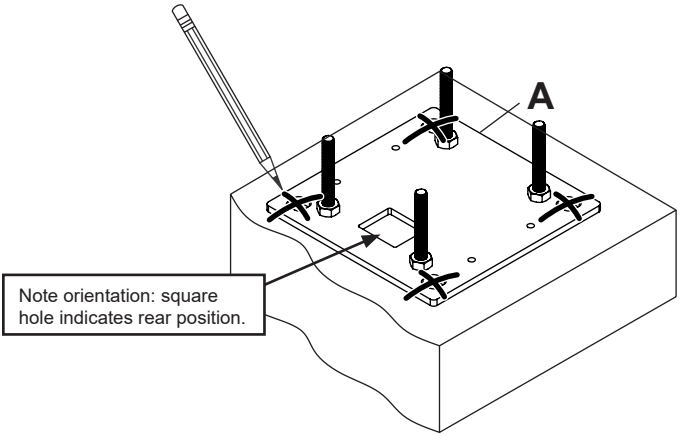

4-2

Drill mounting holes into supporting surface (3" (76mm) minimum depth required).

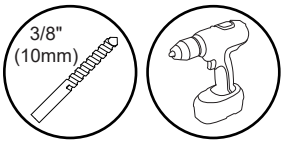

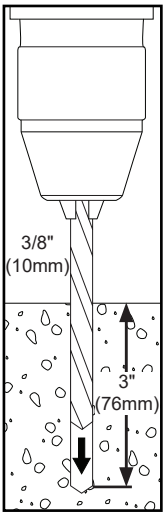

4-3

Align base mounting plates. Install using concrete anchors provided. Place M10 washers onto threaded posts.

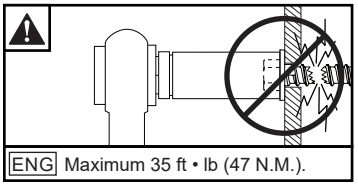

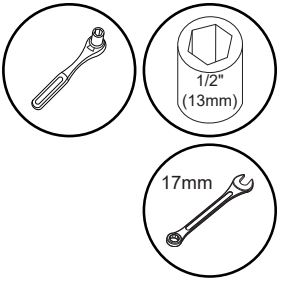

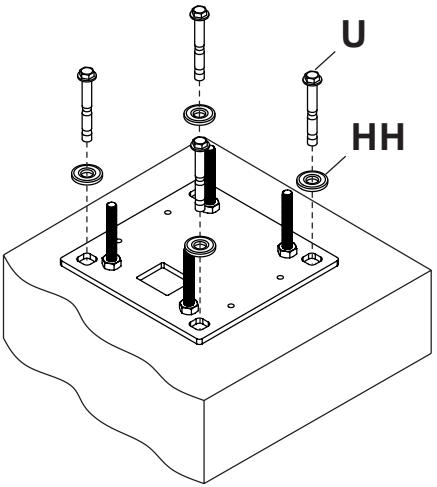

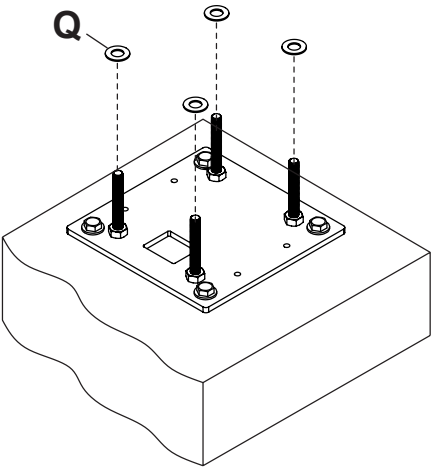

4-4

Attach floor plate to the bottom of long vertical upright, with cut out hole to the rear.

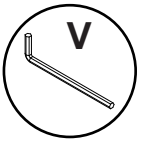

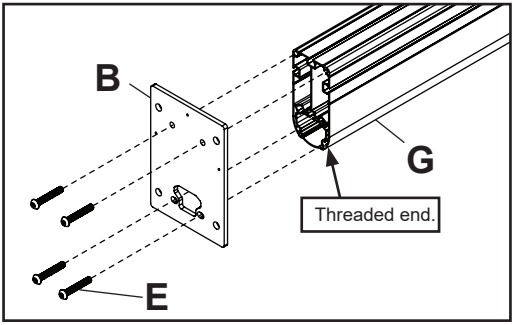

4-5

Install vertical upright assemblies to the base mounting plates.
Use a plumb laser to align holes of top alignment and base mounting plate to achieve plumb. Tighten hardware. Repeat for every upright assembly.

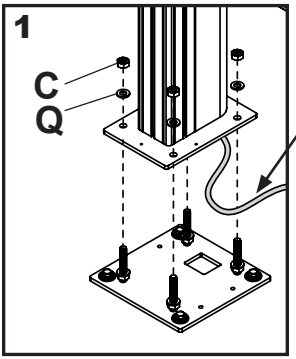

Route cables through vertical upright prior to securing to base mounting plate.

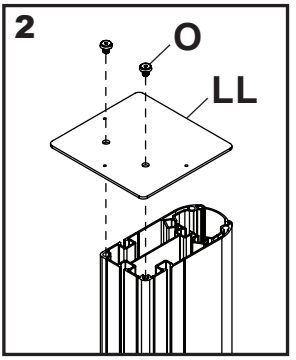

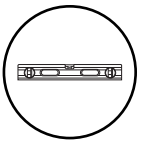

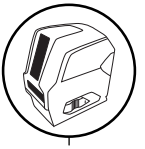



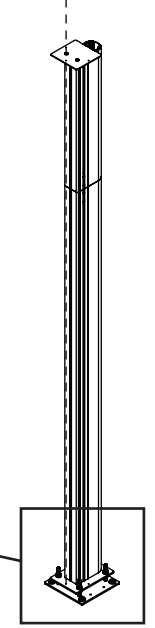

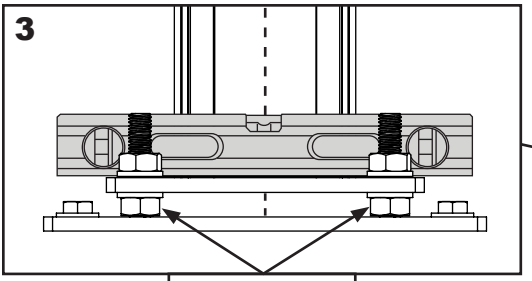

Adjust to level/plumb.

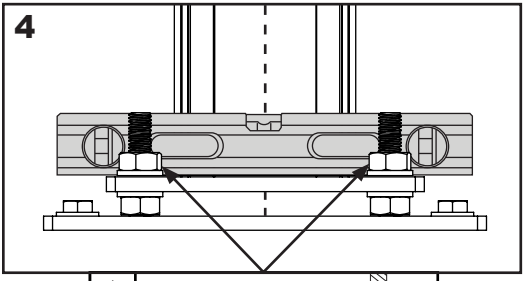

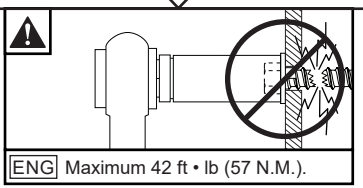

ENG Maximum 42 ft • lb (57 N.M.).

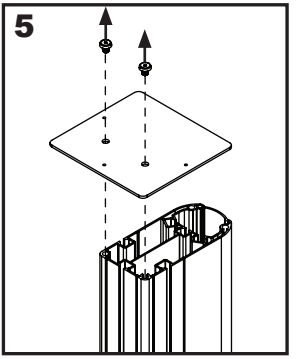

Remove top alignment plate when finished.

5-1

Slide brackets onto vertical upright. Note, your configuration may require vertical upright installed with offset bracket (EE).
Refer to configuration drawing specific to your model.
Hand tighten hardware.

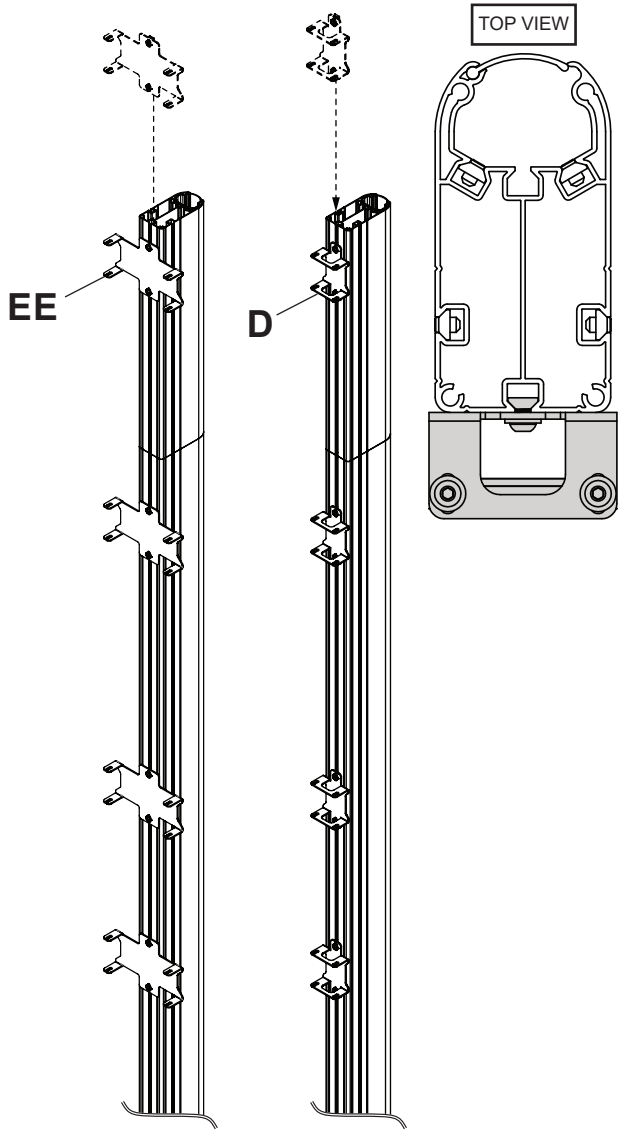

5-2

Slide ceiling brackets into vertical uprights. Hand tighten hardware.

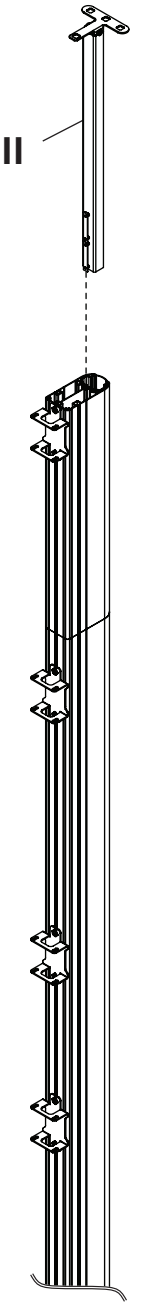

6

⚠ WARNING

ENG - When installing Peerless ceiling mounts on a concrete ceiling, the ceiling must be at least 8" thick with a minimum compressive strength of 2000 psi. Never attach concrete expansion anchors to concrete covered with plaster, drywall, or other finishing material.

6-1

Ensure the assembly is plumb. Extend ceiling bracket and mark mounting holes.

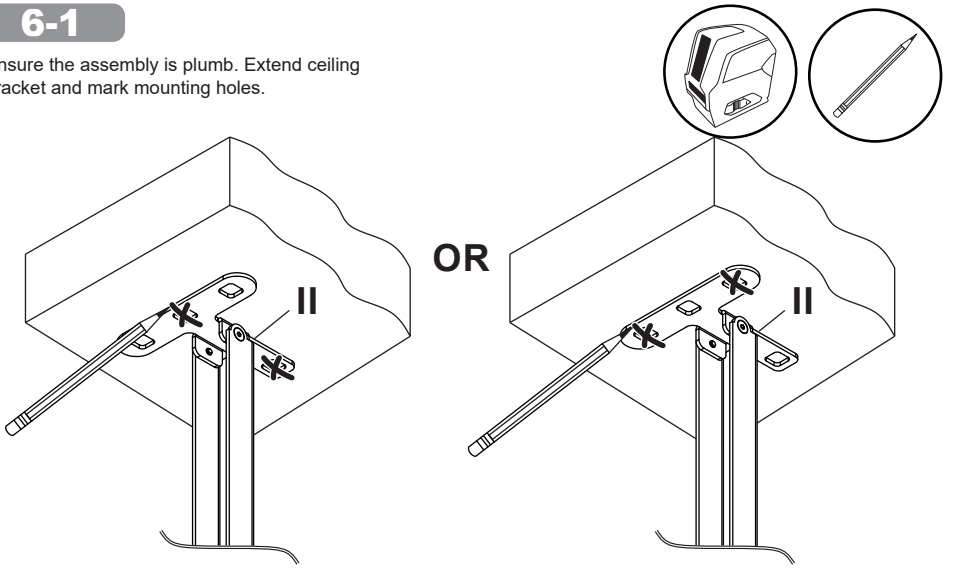

6-2

Lower ceiling bracket and drill mounting holes into supporting surface (3" (76mm) minimum depth required).

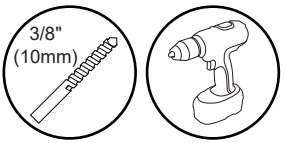

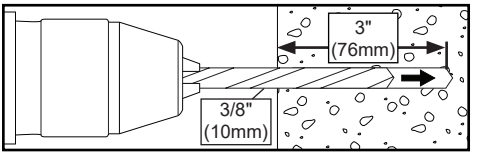

6-3

Insert anchor flush to concrete.

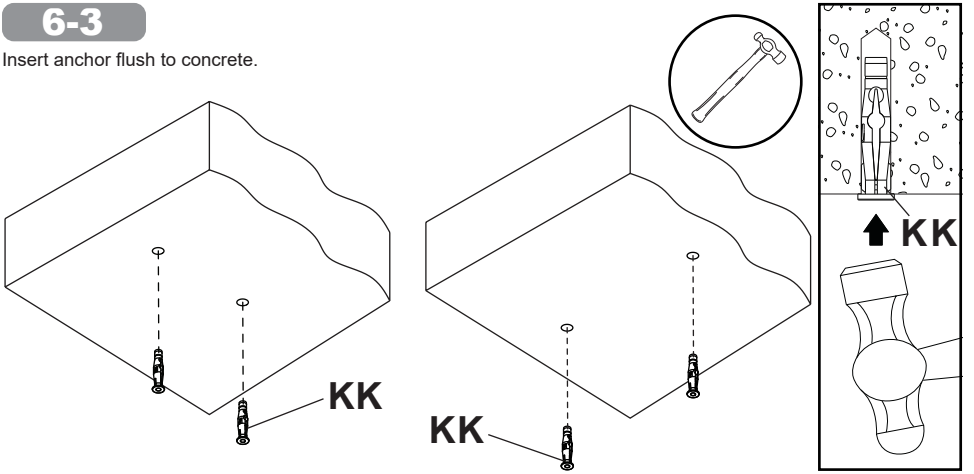

6-4

Extend ceiling bracket to flush with mounting surface.
Install using concrete anchors and wood screws provided.

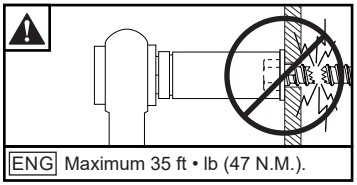

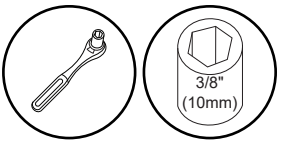

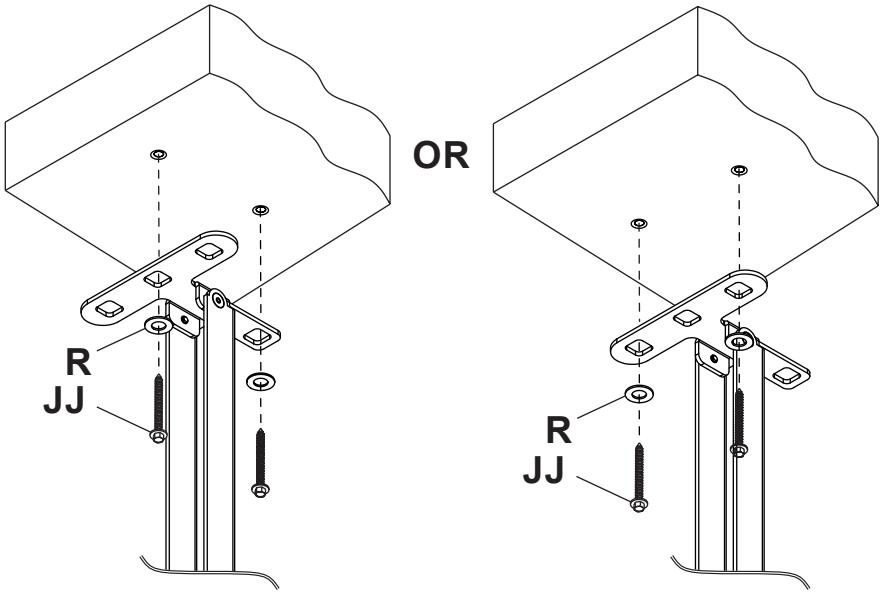

6-5

Tighten hardware inside ceiling bracket channel.



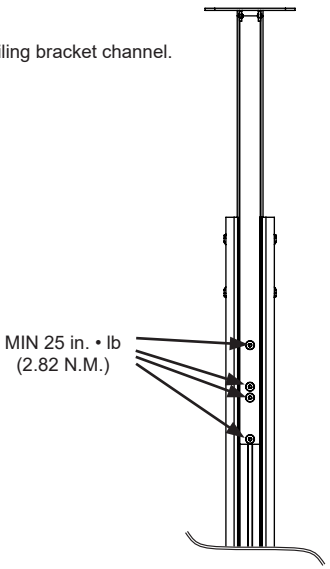

7-1

Viewing from the front, arrange extrusions as shown when building assembly. Expandable extrusion shall be installed on the far right side, note orientation.

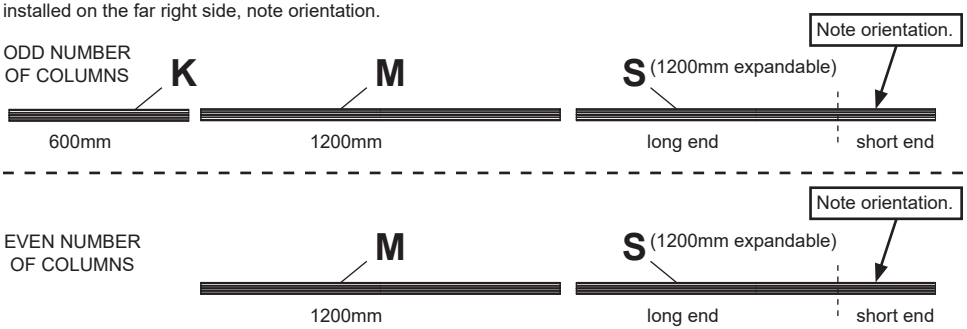

7-2

For displays narrower than 600mm, determine the required extrusion length with the following extrusion cut to length formula:

Video Wall Width - 0.25" (6mm) = Extrusion Length

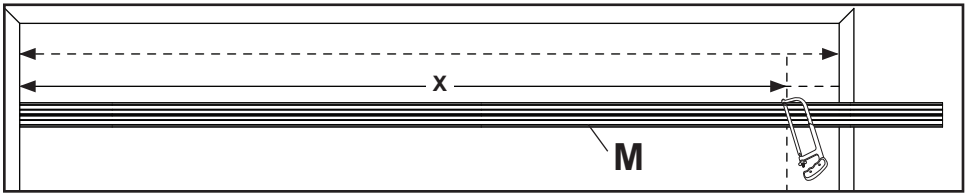

7-3

Connect two horizontal extrusions using connector plate.

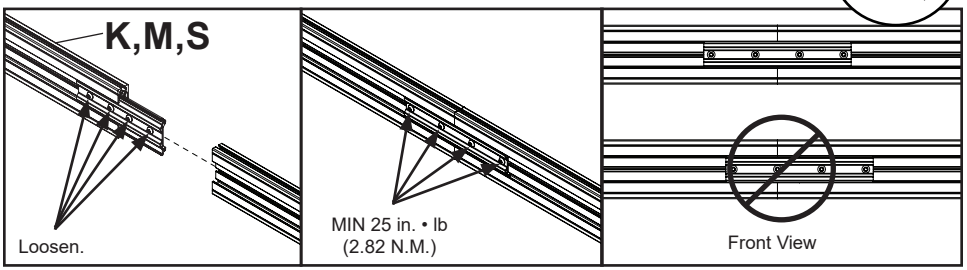

7-4

Extend the connection joint of expandable extrusion as needed.

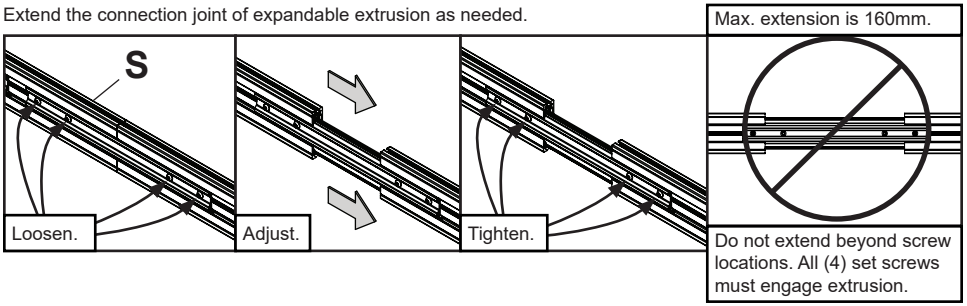

8-1

Drop nut bars into top and bottom channels of horizontal extrusions.

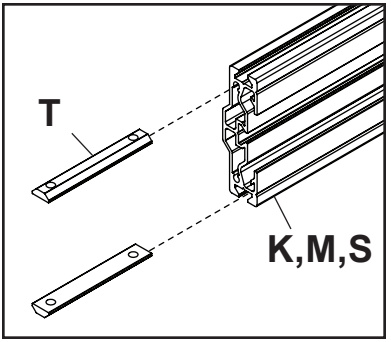

8-2

Position horizontal extrusions into the openings of the attachment brackets. Align nut bars inside the top and bottom channels of horizontal extrusion with holes of attachment brackets. Secure using hardware provided.

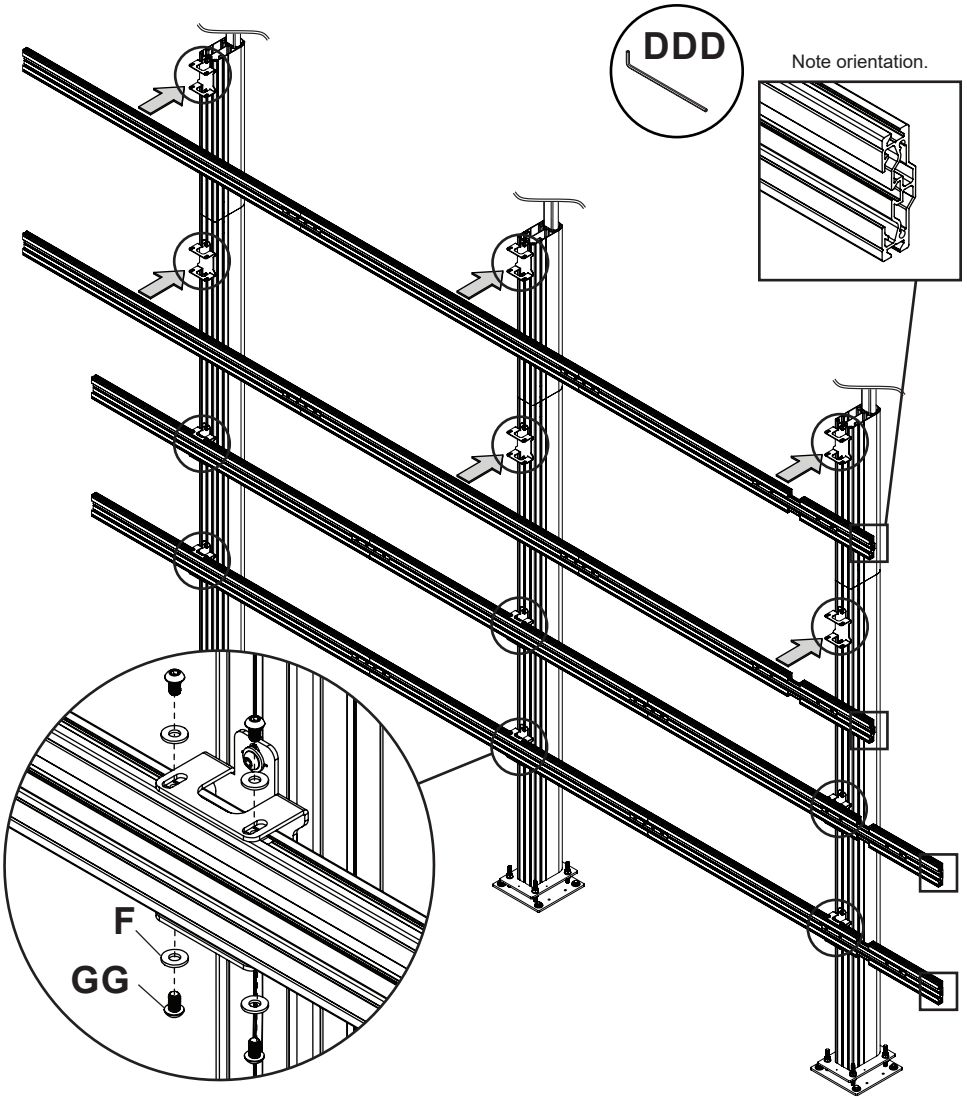

9-1

Determine the combined height of TWO displays being mounted and locate the same dimension on the front of spacer. If height is above 686mm, attach spacer extension. If height is not listed on the spacer, use measurement of the combined height of TWO displays to set custom spacing.

Note, if combined height of TWO displays exceeds 1220mm, set the spacer based on one display as the mount will not skip rows.

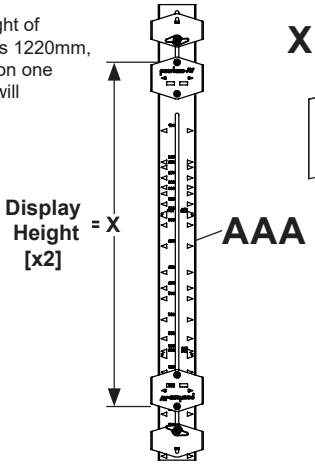

X > 686mm



X ≤ 686mm

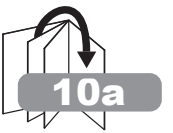

X = Not listed



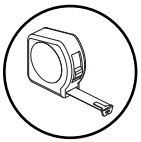

9-2

Add the extension when "X" measurement (step 9-1) is taller than 686mm. Detach lower fixed jaw and clamp bracket from main spacer assembly then reattach to the extension.

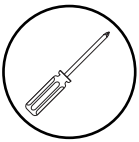



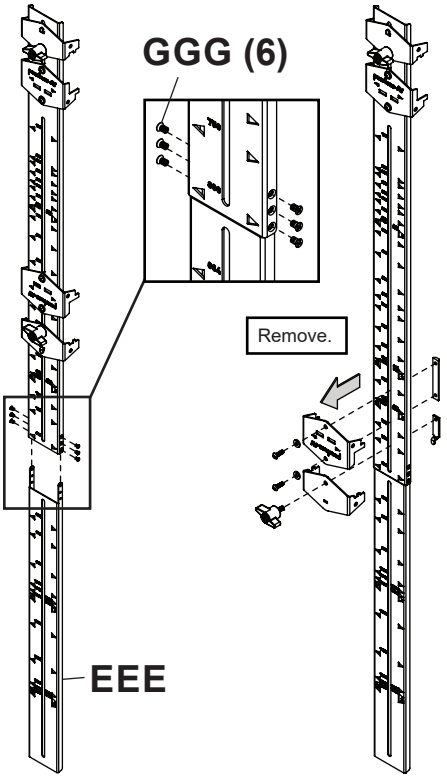

720mm

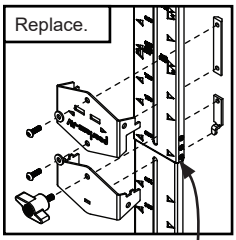

750mm

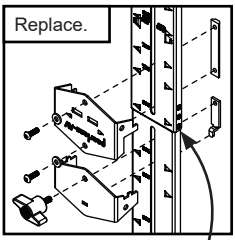

Note location of seam between spacer and extension.

800mm

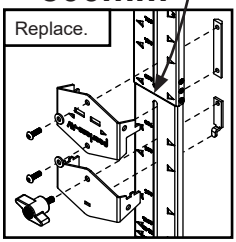

> 800mm

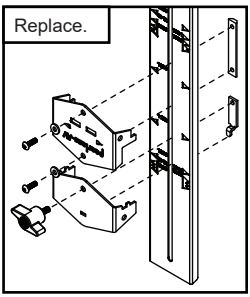

10a

DDD

Move spacer bracket and clamp to align window of spacer bracket with corresponding height value (measurement "X", step 9-1).

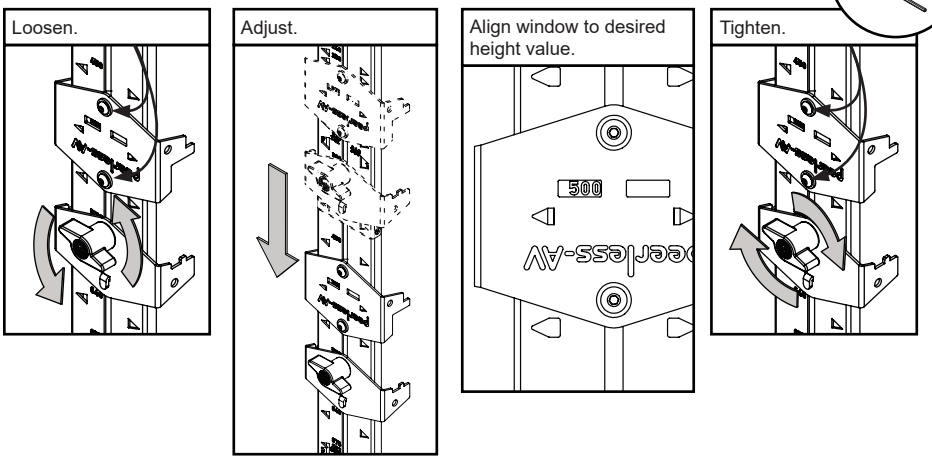

10b-1

DDD

If the combined height of TWO displays is not listed on the spacer, measure them to set custom spacing. Remove top spacer clamp. Move upper spacer bracket to the zero position. Loosen lower spacer bracket to insert shim plate underneath to allow spacer bracket to slide freely.

x2

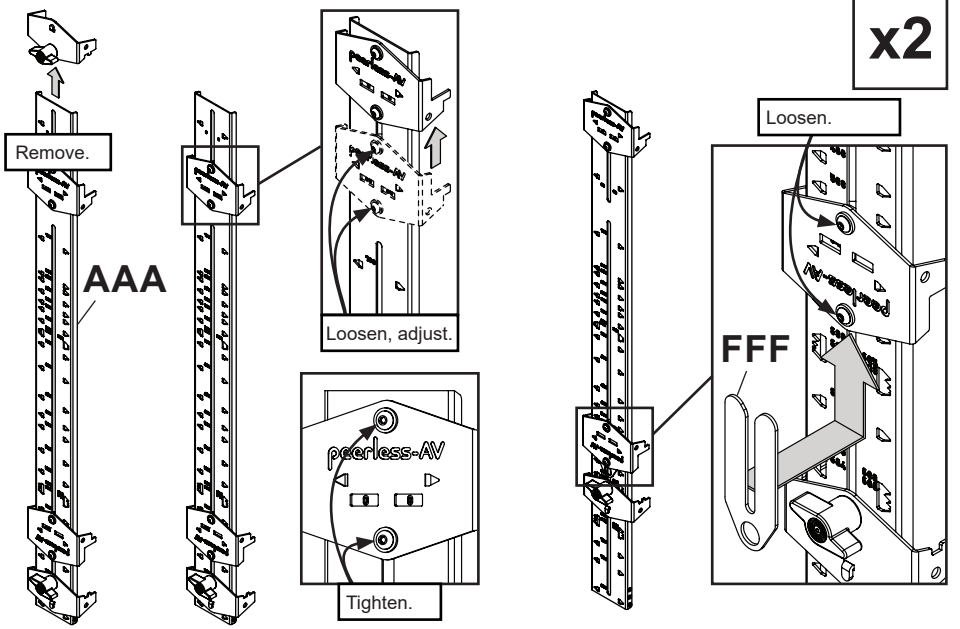

10b-2

With spacer brackets positioned wide enough to fit TWO displays inside, position notch of top spacer bracket flush with top edge of display. Slide the bottom spacer bracket to the bottom edge of display. Tighten screws of bottom spacer bracket.

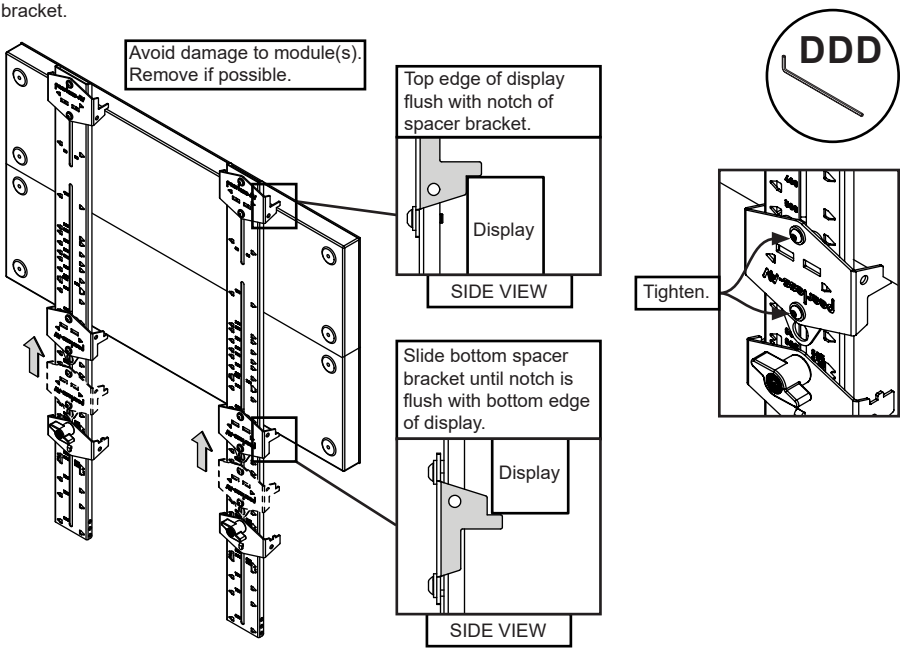

10b-3

Remove display. Return top spacer bracket to the 80mm position.
Replace top clamp onto assembly.

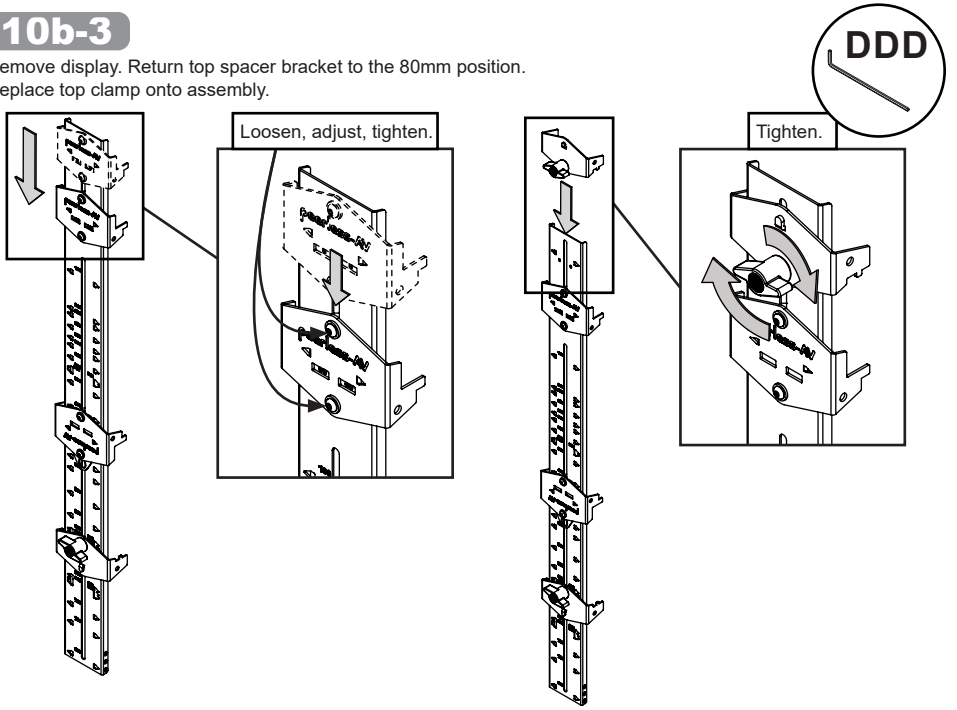

11-1

Refer to drawing specific to your model for measurements to locate top horizontal extrusion's height. The top of attachment bracket shall be flush with top of vertical upright. If a lower A.F.F. (Above Finished Floor) height is desired, adjust the height of the top horizontal extrusion as needed.

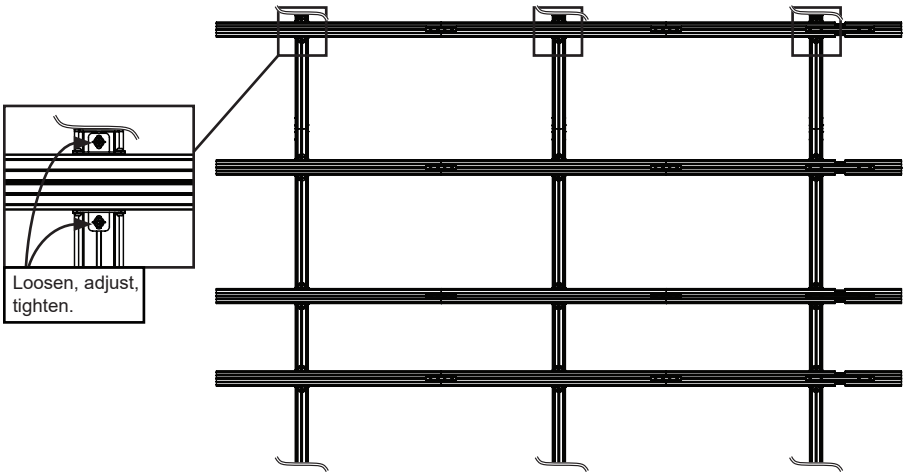

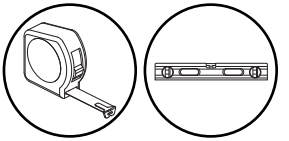

11-2

Adjust height of remaining extrusions using the spacers. Clamp the lower spacer jaw assembly to an unadjusted extrusion assembly. Clamp the upper spacer jaw assembly to extrusion previously installed. Vertically align extrusions with a laser. Tighten hardware.



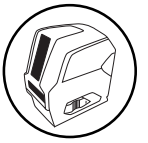

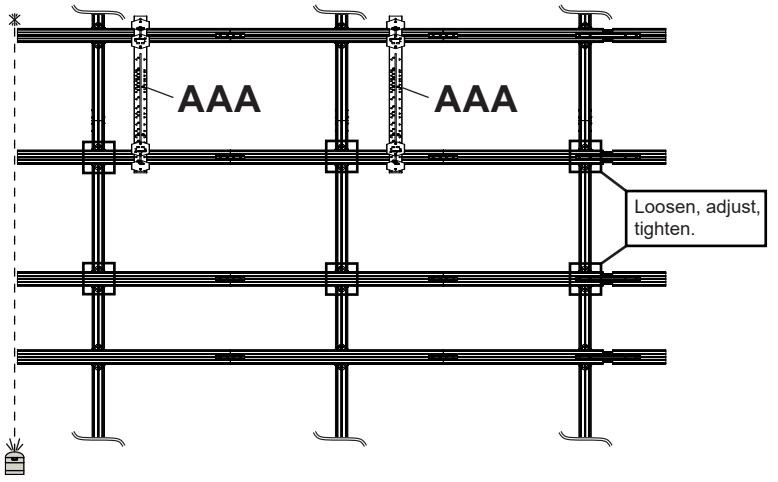

11-3

Refer to configuration drawing specific to your model to locate height of bottom extrusion.
Y = Bottom of horizontal extrusion second from the bottom to the top of horizontal extrusion on the bottom.

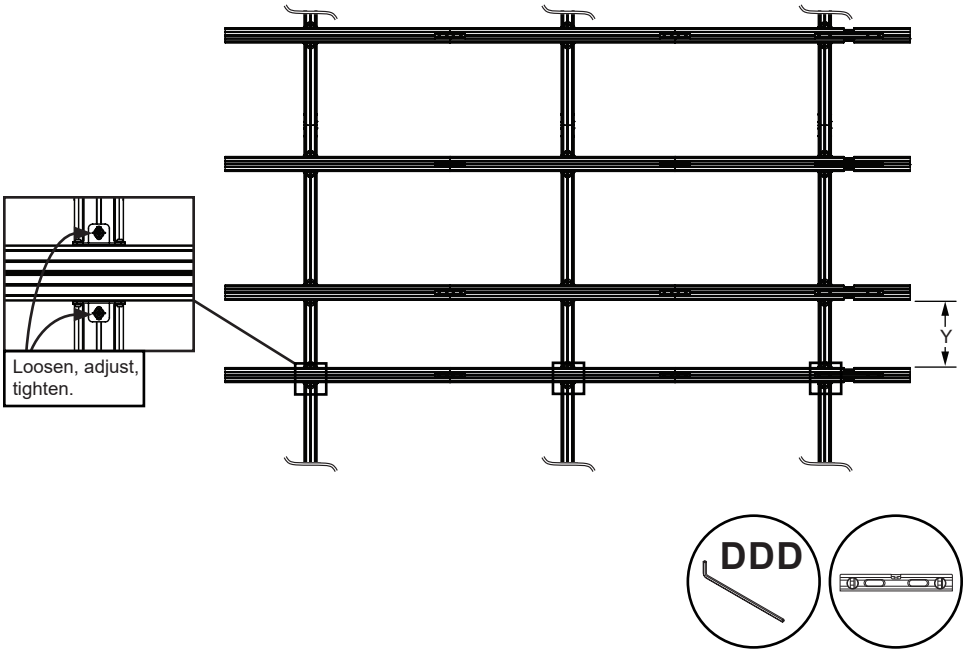

12

Set laser level so that it is parallel to the mount. With horizontal extrusion set all the way back, measure from the face of the extrusion to laser, in various locations. Mount laser target at the attachment bracket location that is near the mount's high point, determined by the shortest distance from the extrusion to the laser. Adjust extrusion out slightly, tighten adjustment screws and mark laser line on the target. Move target near the next attachment bracket, adjusting depth until the laser is on the line, tighten screws. Continue until all attachment brackets are adjusted.

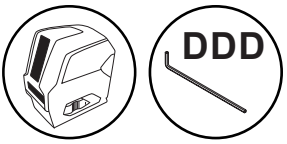

Double check using a straight edge to span three extrusions. Adjust low and high spots as needed.

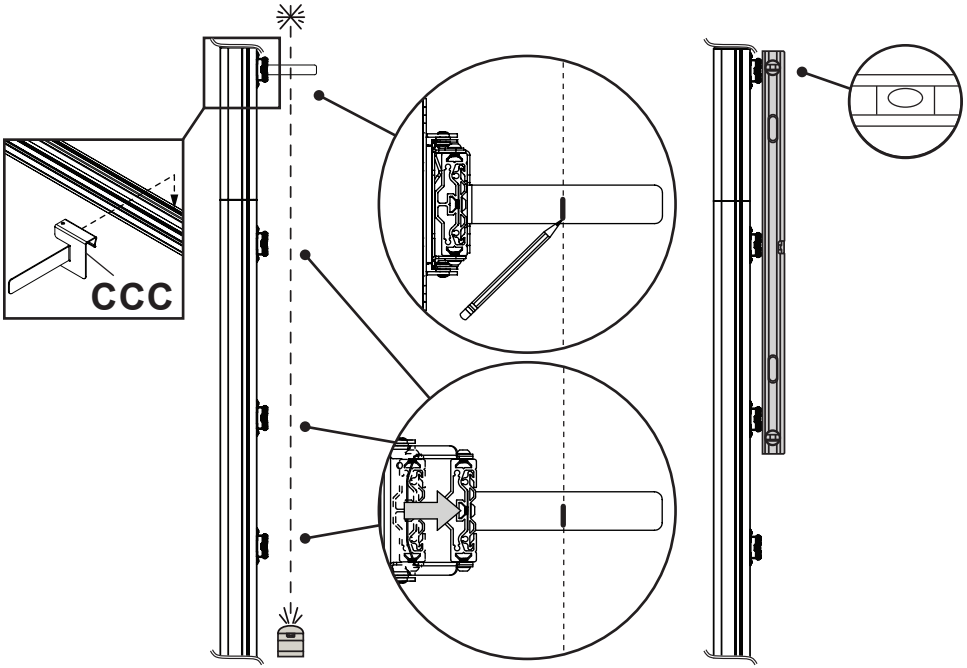

13-1

Use a utility knife to remove notch on the plastic upright covers.

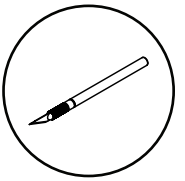

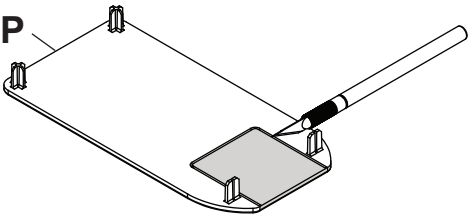

13-2

Install column covers and extrusion end caps.

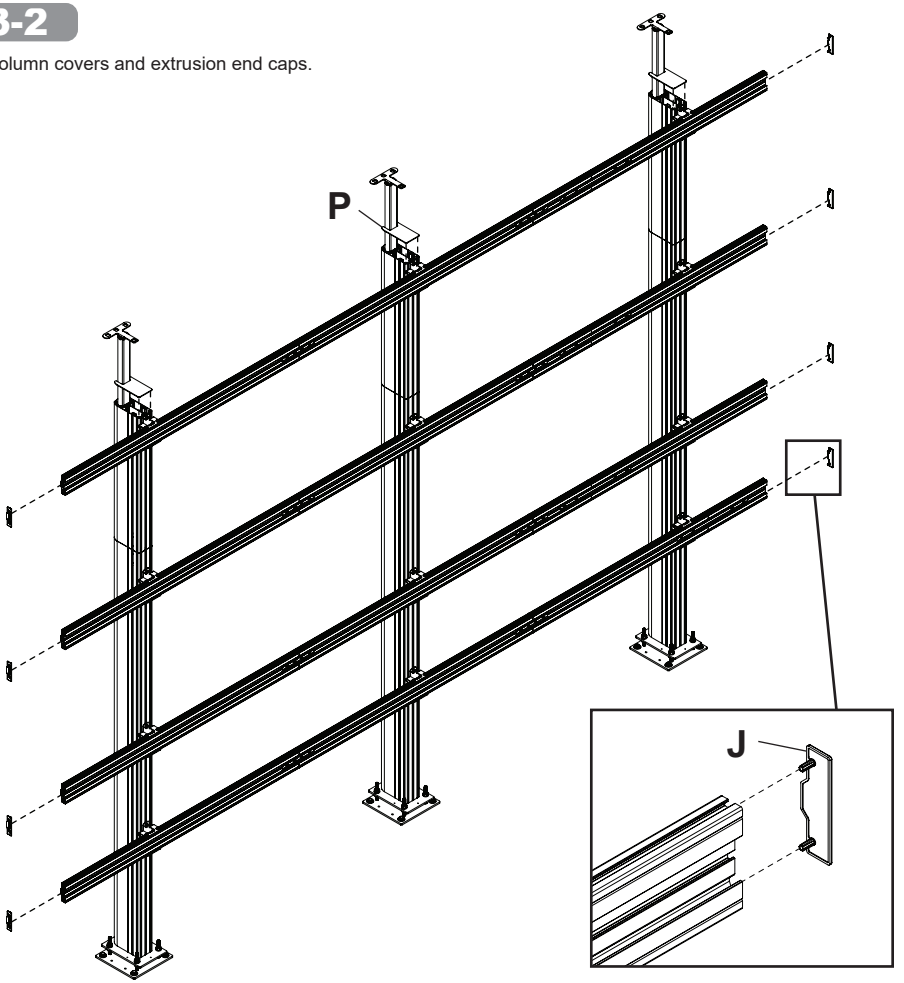

14a

ODD
Number of Rows





If mounting hardware is preinstalled, remove and replace with hardware provided.

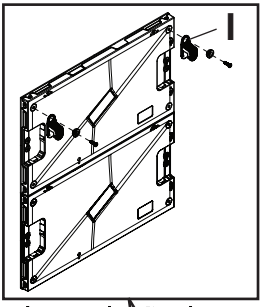

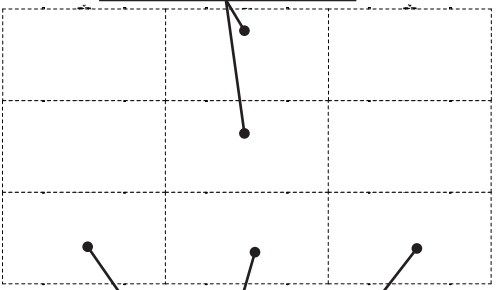

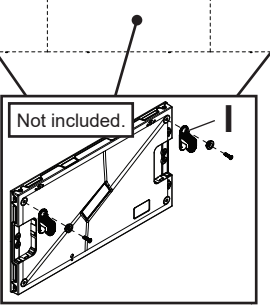

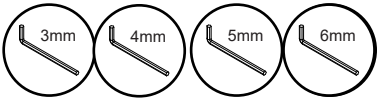

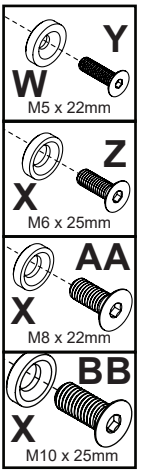

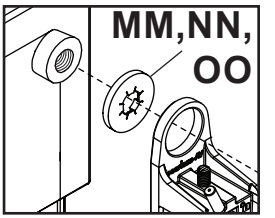

If display has raised mounting points, use boss washers as shown.

14b

EVEN
Number of Rows

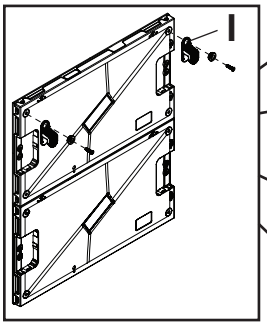

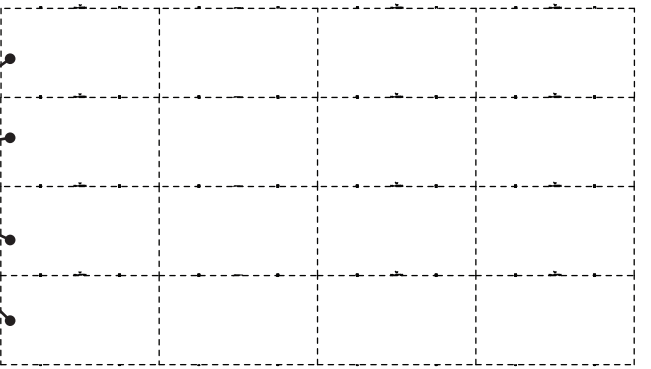

Join two cabinets together vertically using connecting system. Two displays attached together are then mounted onto extrusion as one.

15-1

Install stand-off brackets to the bottom extrusion using drop-in nut bars as shown.



15-2

Hook display cabinets onto horizontal extrusion, adjust height to level and join cabinets together using display's connecting system. Close latch, then run cables one at a time starting from left to right.

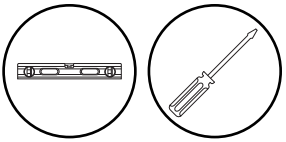

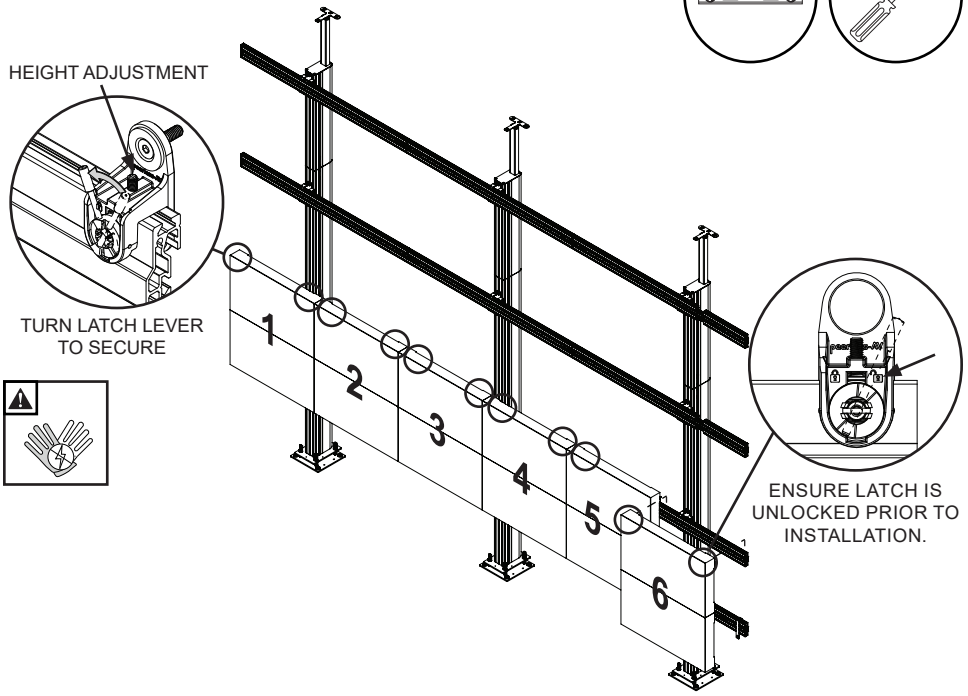

15-3

One stand-off bracket shall be located at every seam between two displays.
Secure stand-off brackets to the bottom mounting holes of the bottom row of displays.

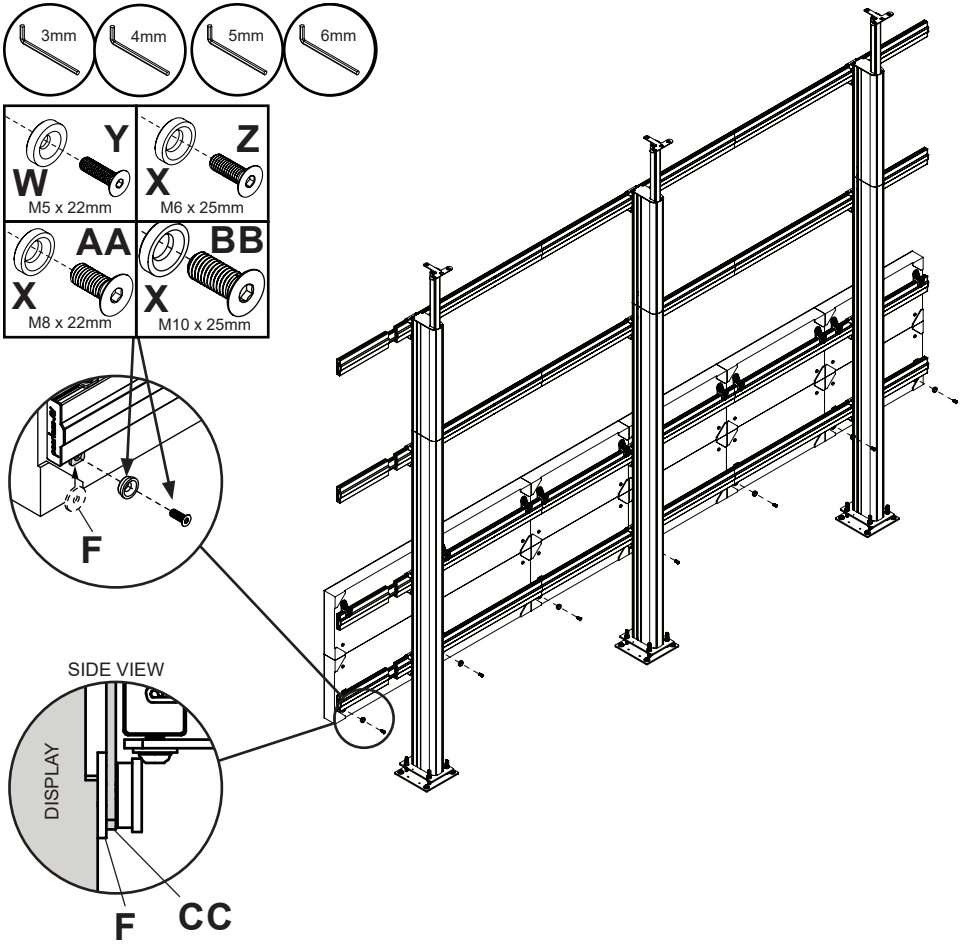

16

Hook display cabinets onto horizontal extrusion, adjust height to level and join cabinets together using display's connecting system. Close latch, then run cables one at a time starting from left to right.

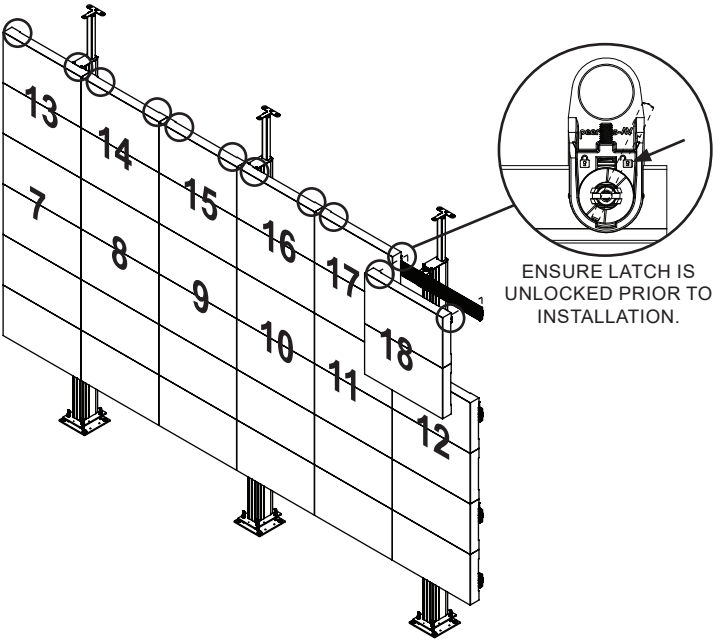

17

To remove, start from the top right.
Open latch assemblies, disconnect cables, separate cabinets and remove displays one at a time.

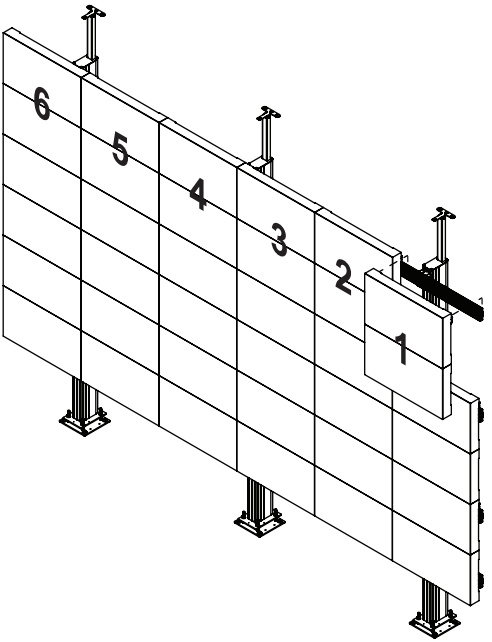

This page intentionally left blank.

ENG	Warranty	ESP	Garantía	FRN	Garantie	DEU	Garantie	NEL	Garantie
ITL	Garanzia	ČEŠ	Záruka	SLK	Záruka	POR	Garantia	TÜR	Garanti

www.peerless-av.com/warranty • www.peerless-av.com • www.peerless-av.com/patents

Peerless-AV
2300 White Oak Circle
Aurora, IL 60502, USA
info@peerless-av.com

(800) 865-2112
(630) 375-5100

Peerless-AV EMEA
Unit 2, Curo Park
Frogmore, St. Albans,
Hertfordshire, AL2 2DD
United Kingdom

+44 (0) 1923 200 100

Peerless-AV B.V.
Papendorpseweg 75
3528 BJ Utrecht
The Netherlands

+31 (0) 70 770 8037

Peerless-AV Latin America
Av. de las Industrias 413
Parque Industrial Escobedo
General Escobedo N.L.,
México 66062

+52 (81) 8384-8300

© 2026 Peerless Industries, Inc. Peerless-AV® is a registered trademark of Peerless Industries, Inc. All rights reserved.
Other parties' marks are the property of their respective owners.